AD A051819

5

FINAL REPORT

DEVELOPMENT OF FLIGHT-SAFETY PREDICTION METHODOLOGY FOR U. S. NAVAL SAFETY CENTER

June 1969

AD
DDC FILE COPY

Prepared for

U. S. NAVAL SAFETY CENTER
Norfolk, Virginia

Under Contract F09603-68-A-0317 FK01

Publication 753-01-3-982

DISTRIBUTION STATEMENT A
Approved for public release;
Distribution Unlimited

ARINC RESEARCH CORPORATION

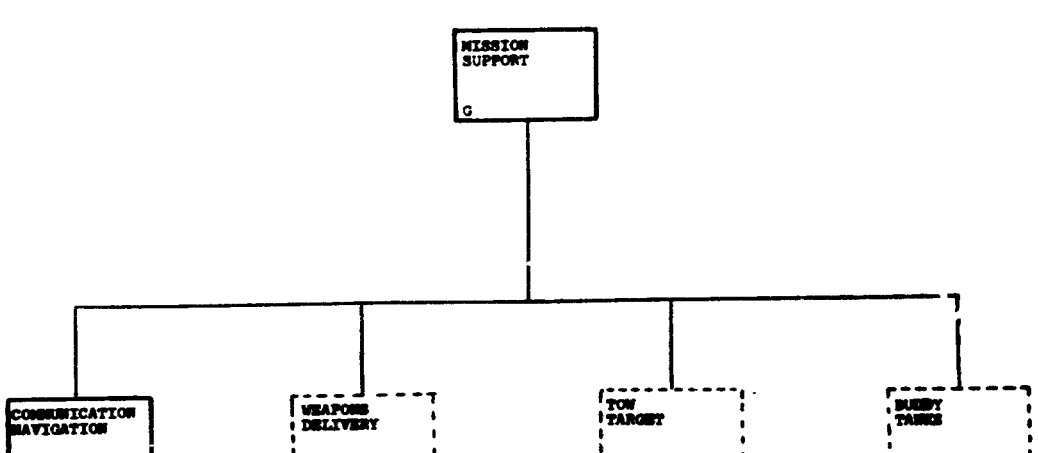

Section G-1

Aircraft: F-4J	
Title: Functional Diagram MISSION SUPPORT SECTION	
Document: NA	**rev. date** NA
Date:	

Section G

UNCLASSIFIED

SECURITY CLASSIFICATION OF THIS PAGE (When Data Entered)

REPORT DOCUMENTATION PAGE		READ INSTRUCTIONS BEFORE COMPLETING FORM
1. REPORT NUMBER: 753-01-3-982	2. GOVT ACCESSION NO.	3. RECIPIENT'S CATALOG NUMBER
4. TITLE (and Subtitle): DEVELOPMENT OF FLIGHT-SAFETY PREDICTION METHODOLOGY FOR U.S. NAVAL SAFETY CENTER,		5. TYPE OF REPORT & PERIOD COVERED
		6. PERFORMING ORG. REPORT NUMBER: 753-01-3-982
7. AUTHOR(s): D. M. Kelly		8. CONTRACT OR GRANT NUMBER(s): F09603-68-A-0317 FK01
9. PERFORMING ORGANIZATION NAME AND ADDRESS: ARINC Research Corp. 2551 Riva Road Annapolis, Maryland		10. PROGRAM ELEMENT, PROJECT, TASK AREA & WORK UNIT NUMBERS
11. CONTROLLING OFFICE NAME AND ADDRESS: U.S. NAVAL SAFETY CENTER Norfolk, Virginia		12. REPORT DATE: Jun[redacted]69
		13. NUMBER OF PAGES: 136
14. MONITORING AGENCY NAME & ADDRESS (if different from Controlling Office): U.S. NAVAL SAFETY CENTER Norfolk, Virginia		15. SECURITY CLASS. (of this report): UNCLASSIFIED
		15a. DECLASSIFICATION/DOWNGRADING SCHEDULE

16. DISTRIBUTION STATEMENT (of this Report)

UNCLASSIFIED/UNLIMITED

17. DISTRIBUTION STATEMENT (of the abstract entered in Block 20, if different from Report)

18. SUPPLEMENTARY NOTES

19. KEY WORDS (Continue on reverse side if necessary and identify by block number)

20. ABSTRACT (Continue on reverse side if necessary and identify by block number)

This final report describes the activities of ARINC Research Corporation pursuant to the development of a flight safety measurement and prediction capability for the U.S. Naval Safety Center.

The methodology developed encompassed functional analysis of the F-4J aircraft, assessment of the importance of safety-sensitive functional paths, and the construction and exercising of a mathematical model to arrive at a numerical measurement of the safety criticalities of aircraft equipments.

The results of this effort are presented in the text and appendices to this

DD FORM 1 JAN 73 1473 EDITION OF 1 NOV 65 IS OBSOLETE

UNCLASSIFIED

SECURITY CLASSIFICATION OF THIS PAGE (When Data [illegible])

FINAL REPORT

(5)

DEVELOPMENT OF FLIGHT-SAFETY PREDICTION METHODOLOGY FOR U. S. NAVAL SAFETY CENTER

June 1969

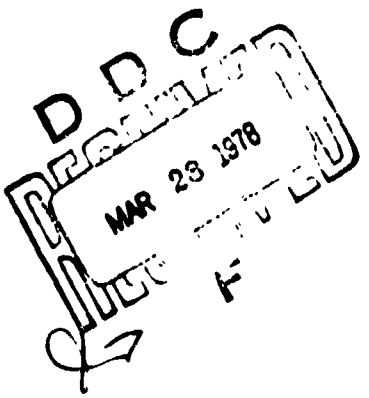

Prepared for

U. S. NAVAL SAFETY CENTER
Norfolk, Virginia

Under Contract F09603-68-A-0317 FK01

Prepared by

D. M. Kelly

Approved by

for H. A. Lindgren

ARINC RESEARCH CORPORATION
Western Division
P. O. Box 1375
Santa Ana, California 92702

Publication 753-01-3-982

ABSTRACT

This final report describes the activities of ARINC Research Corporation pursuant to the development of a flight safety measurement and prediction capability for the U. S. Naval Safety Center.

The methodology developed encompassed functional analysis of the F-4J aircraft, assessment of the importance of safety-sensitive functional paths, and the construction and exercising of a mathematical model to arrive at a numerical measurement of the safety criticalities of aircraft equipments.

The results of this effort are presented in the text and appendices to this report.

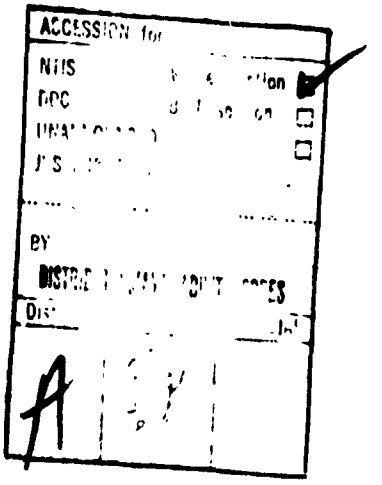

FOREWORD

In 1965, ARINC Research Corporation began to explore the desirability and practicability of an objective quantification of flight safety. The investigation, which included a comprehensive review of current flight-safety activities, suggested the feasibility of developing a quantification technique.

An Air Force-funded study by ARINC Research in 1967 demonstrated the feasibility of a predictive technique based on system reliability characteristics. A methodology was developed for providing flight-safety indicators sensitive to changes in equipment malfunction rates, in their effects on the mission, and in unit or fleet operations. This methodology, in conjunction with accident data, permits timely predictions of accident potential, and can contribute to design evaluation and operational planning by providing a degree of safety assessment previously unavailable. The Air Force continued funding of this effort to develop the mathematical models for the F-106 aircraft.

In June 1968 the Naval Safety Center contracted with ARINC Research Corporation to extend this methodology to the F-4J aircraft.

The first months of this effort were devoted to data surveys, collection of flight data, acquisition of aircraft documentation, and formulation of criteria for adapting the Air Force mathematical model to the Navy application. Results of this initial effort appear in the first interim report under this contract.* The report also describes the techniques to be applied in identifying functional relationships and assessing safety sensitivity.

The second interim report,** describes the development of functional diagrams and safety sensitivity assessments for the F-4J aircraft. The functional diagrams and an example of safety sensitivity analyses are presented in the appendices.

---

* Development of Flight-Safety Prediction Methodology for U. S. Naval Safety Center, Nov. 1968, Publication 753-01-1-938.

** Development of Flight-Safety Prediction Methodology for U. S. Naval Safety Center, April 1969, Publication 753-01-2-968.

CONTENTS

1. TECHNICAL APPROACH 1-1

1.1 General 1-1
1.2 Concepts 1-1
1.3 Application 1-2

2. ANALYSIS 2-1

2.1 Data Source Survey 2-1
2.2 Aircraft Design Documentation 2-3
2.3 Model Development 2-5
2.4 Functional Analysis 2-6
2.5 Sensitivity Assessment 2-8
2.6 Criticality Model Exercise 2-9

3. CONCLUSIONS 3-1

APPENDIX A: FUNCTIONAL ANALYSIS OF F-4J AIRCRAFT A-1

APPENDIX B: EQUIPMENT SAFETY CRITICALITY PRINTOUT B-1

APPENDIX C: COMPUTER PROGRAMS AND LISTINGS C-1

1. TECHNICAL APPROACH

1.1 GENERAL

The purpose of this program was to extend the previously developed flight-safety measurement and prediction methodology to Naval aircraft and data systems The analysis is designed to evaluate malfunction data with respect to the safety implications that are uniquely associated with each phase of the mission profile. Through this effort the safety criticality of malfunction occurrences can be quantified, thereby allowing correction of flight safety problems on a safety-priority basis.

At the outset of this study, ARINC Research conducted a functional criticality assessment of the F-4J aircraft. Criticality indices were developed which are sensitive to the flight phase in which the aircraft is operating, the degree of exposure to malfunctions in these phases, and the impact of this exposure on safety

Identification of the safety criticality of malfunction occurrences, when fully developed and implemented, can be used in the prevention of accidents. This can be achieved through problem identification based on data from all Navy and Marine aircraft.

The scope of this effort was limited to analysis of equipment functions and their relevance to flight safety. Flight safety problems such as pilot error, avoidance of air traffic, or enemy action can only be evaluated by this methodology to the extent that, should they cause loss of function (malfunction) of the aircraft equipment, the resulting degradation in safety can be assessed.

1.2 CONCEPTS

The mathematical model, and thus the safety methodology, is based on the premise that an aircraft is in a safe condition if it is operating within its prescribed performance limits. The model thus does not consider ejection capability, parachutes, life rafts, etc., which do not make an aircraft safer, per se, but provide for the survivability of the pilot when the aircraft is unsafe.

The elimination of personal injury and property damage is the objective of all safety efforts. However quantification of these factors is not suitable for predictive purposes, being of value primarily as an after-the-fact performance indicator The safety quantification methodology developed by ARINC Research does not use dollar risk as the quantification parameter because the magnitude of this value is influenced by factors not inherent to the aircraft system, but usually to location and happenstance. Therefore, this technique assumes that dollar-damage is an "effect" of being unsafe The parameter of safety quantified by this approach is a measure of how often the aircraft will be in a condition to cause damage (accident exposure).

The probability of an aircraft being in a condition to cause an accident can be expressed as the probability of an event multiplied by the conditional probability that the event will cause accident exposure. Stated in equation form,

$$P_{aj} = P_j \times P_{a/j}$$

where P_{aj} is the probability of an accident exposure due to event j;

P_j is the probability of occurrence of event j; and

$P_{a/j}$ is the probability of accident exposure given that event j has occurred (Sensitivity Factor).

In terms of malfunction contributions to accident exposure, P_j can be thought of as the probability of failure j, and $P_{a/j}$ as the probability that the occurrence of failure j will result in accident exposure. The probability of accident exposure, P_{aj}, is referred to as the Safety Criticality, and can serve as a parameter for ranking the safety significance of events.

The Sensitivity Factor ($P_{a/j}$) can be used to weight malfunction occurrence data to determine which malfunctions most degrade system safety. Sensitivity factors will often vary with mission phase, reflecting the change in malfunction importance with changes in the operating requirements associated with these phases.

The predictive ability of the flight-safety quantification technique is based on the identification of event-occurrence trends that indicate probable changes in accident rate.

1.3 APPLICATION

Under the present effort a criticality assessment model for the F-4J aircraft was developed. The resulting criticality indices are responsive to the flight phase in which the aircraft is operating, the exposure to malfunction in these phases, and the impact on safety of this exposure.

The identification of safety-problem criticality in operational aircraft provides the visibility necessary for arriving at decisions to mod or not-to-mod, optimizing of cost versus safety, and evaluation of the adequacy of corrective actions.

When included in routine periodic malfunction data processing programs, criticality trends can be identified and corrective actions implemented, thereby preventing the occurrence of accidents due to the identified cause.

This safety criticality assessment methodology could also be applied prior to an aircraft becoming operational. The assessment of safety sensitivity during the design phase of aircraft procurement can alert project management to potential trouble areas and functional weaknesses.

2. ANALYSIS

In this section is discussed the development of a capability for assessing problem criticality with respect to flight safety. The development comprises the six major tasks discussed in the following subsections.

2.1 DATA SOURCE SURVEY

A survey of available Navy data was made to determine its adequacy and applicability relative to a flight safety model, and any modifications necessary to the Air Force model to accommodate Navy data.

The Naval Safety Center's data bank was found to be adequately recording the malfunctions registered by the "3-M" data system, and the capability already exists within the Center for computing mean time between failure (MTBF) from 3-M failure information coupled with flight times reported on pilot debriefing forms (yellow sheets). As in the case of the Air Force math model (designed for application to the AFM 66-1 data system), the "When Discovered" codes used in the 3-M system are inadequate for describing the length of time an aircraft is exposed to malfunctions--a basic input to the safety-prediction math model.

An investigation was conducted to determine the impact on the predictive ability of the methodology if only total malfunctions versus total airframe hours were available. Data collected from the Aerospace Defense Command during the earlier Air Force study were examined from this standpoint. It was found that, due to a significant change in failure rate with flight time and mission phase, failure probabilities computed on the basis of a constant failure rate throughout the mission were unrealistic. It was therefore concluded that some form of data screening must be performed in order to provide accurate measurements of malfunction exposure.

Due to the magnitude of the effort required to collect all flight-phase information from all naval aircraft, it was decided to initiate an experimental data-collection and analysis program that would provide the data necessary to determine actual malfunction exposure with respect to the total number of failures experienced. The Naval Safety Center arranged for this data collection effort to be conducted at the VF-121 Squadron, Miramar Naval Air Station.

For this effort, ARINC Research compiled a manual for coding pilot-reported malfunction symptoms. The method of symptom coding is unique in its ability to allow machine processing of informal pilot "squawks." This Navy manual was adapted from that used by the Air Force Aerospace Defense Command in its Interceptor Sortie Evaluation Program, though extended to reflect the F4-B/J aircraft and naval mission requirements. Additionally, ARINC Research developed an experimental pilot debriefing questionnaire (Figure 1). These debriefings, held in the Maintenance Control Center following each sortie, provide first-hand (aircrew) information on any malfunction of the aircraft, detailed mission profile information for each flight, and the flight-purpose code.

This data-collection effort was begun in September 1968, and data were compiled from 1000 sorties flown by VF-121. Data received by ARINC Research from the squadron were reduced to computer-punchcard format for analysis of exposure indices.

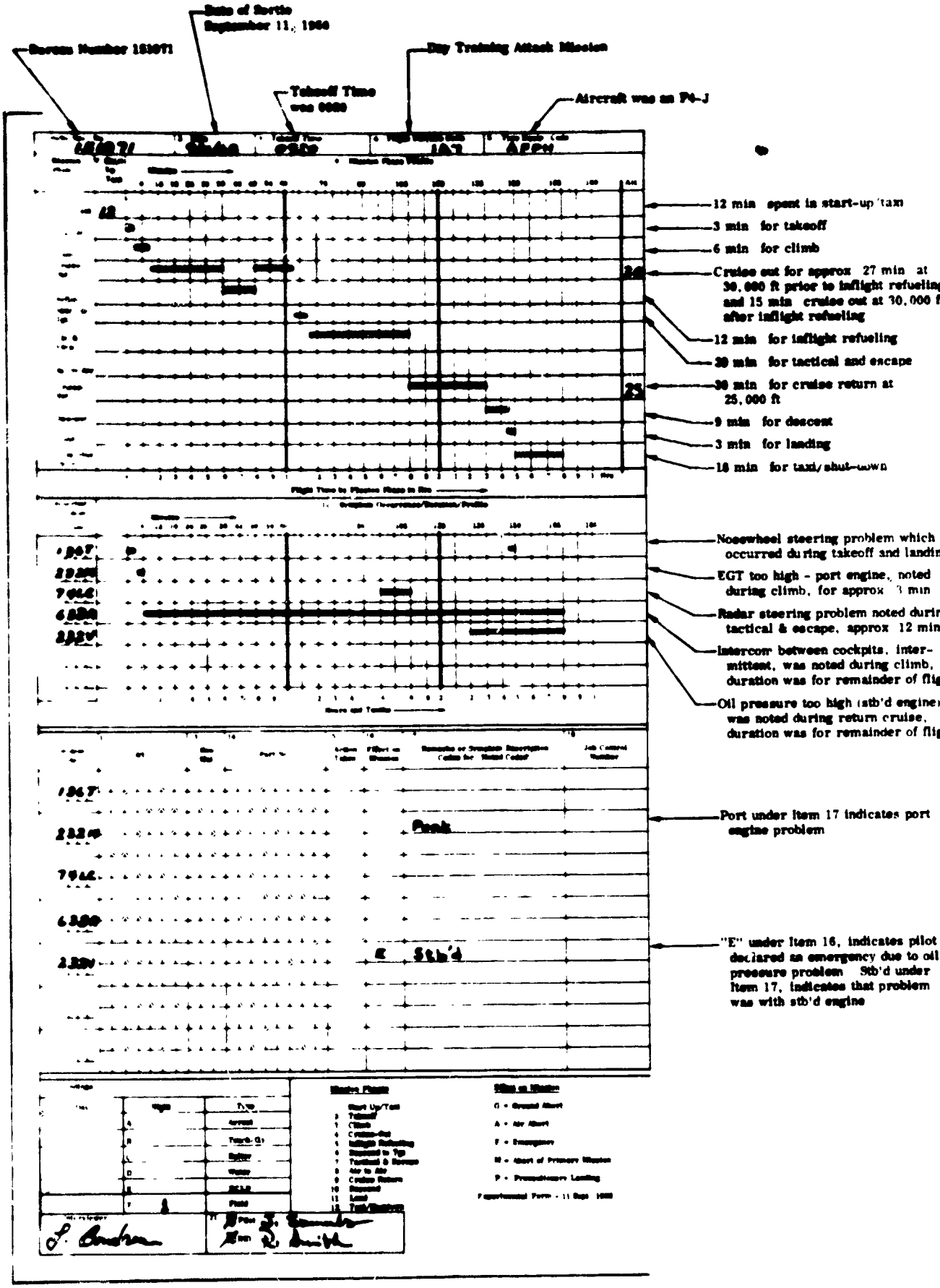

Figure 1. Sample Form

The information was then analyzed to determine the correlation between the number of failures reported and the actual exposure to failure during flight.

The Miramar data were first screened to eliminate CARQUAL and FCLP missions, thereby representing only missions in which mission phases are sequential and nonrepetitive. Naval Safety Center flight-time and 3M data for the Manual Flight Control System were compared with the corresponding VF-121 data and found to agree closely in both average flight time (within two minutes) and failure rate. Because of this good correlation, the method of assessing failure probability by mission phase was established as 1) computing the "average mission" failure probability

$$(P_F = 1 - e^{-\frac{\text{No. failures}}{\text{No. flights}}})^*$$

and then 2) determining the ratio of aircraft in a failed condition to the total aircraft in each flight phase. The ratio of the percent failed per phase to the mission failure probability was computed for each aircraft system for each mission phase. These values are listed in Table 1. In criticality computations utilizing 3M data, these values are used as weighting factors for mission-phase failure allocations. These allocations were used with the applicable safety sensitivity assessment to arrive at the mission phase criticality of malfunctions.

2.2 AIRCRAFT DESIGN DOCUMENTATION

The Naval Safety Center supplied ARINC Research with a complete set of Maintenance and Illustrated Parts Breakdown manuals for the F-4J aircraft. These documents served as the basis for functional analysis and the assessment of safety sensitivity. The adequacy of these documents is comparable to that of the equivalent documents on which the Air Force analysis was based.

A review was made of the documentation available at ARINC Research on the F-4C aircraft, as compiled under the IROS program for the Air Force. Diagrams constructed during this program identify the functional relationships of equipments required for mission success. With respect to a safety sensitivity assessment, however, the objective of the functional analysis must by definition be different; therefore this documentation was primarily of value in identifying Work Unit Codes for various aircraft equipments.

Due to the differences in the Navy/Air Force versions of the F-4, and the difference in the purpose of the two safety efforts, the functional analysis under the Navy contract did not utilize the Air Force F-4C documents. They were used only as a reference in cases where questions arose as to how the aircraft operates.

---

*This equation reflects the application of the traditional reliability equation, $R = e^{-\lambda t}$, modified to apply to only the average mission time ($\frac{\text{Total Time}}{\text{No. of Flights}}$). Because λ is equal to the number of equipment failures divided by the total flight time, the exponent becomes equal to the number of failures divided by the number of flights

TABLE 1. RATIO OF FAILURE PROBABILITY*

Aircraft System \ Mission Phase	Ratio of Failure Probabilities**								
	1	2	3	4	5	6	7	8	9
Airframe	0.2784	0.3476	0.3382	0.3374	0.7100	0.7263	0.4800	0.5497	0.6346
Fuselage Compartment	0.4053	0.7394	0.7489	0.6788	0.7942	0.8059	0.8083	0.8916	0.8951
Landing Gear	0.0503	0.4108	0.2597	0.2037	0.1753	0.2421	0.2118	0.6209	0.8603
Flight Control, Manual	0.3936	0.4803	0.5254	0.5840	0.5526	0.7494	0.7060	0.6090	0.7922
Flight Control Augmentation	0.2755	0.6541	0.7550	0.4984	0.9662	0.8912	0.7766	0.8547	0.8309
Engine	0.4694	0.6206	0.4536	0.4540	0.4318	1.0290	0.4610	0.4850	0.5424
Air Condit/Pressurization	0.3309	0.4202	0.4264	0.3919	0.7210	0.5949	0.4341	0.5080	0.5804
Electrical Power	0.1603	0.3814	0.4421	0.3245	0.2159	0.1268	0.5570	0.3026	0.2672
Lighting System	0.3615	0.4297	0.5593	0.5711	0.6295	0.8705	0.6960	0.6805	0.8470
Hydraulic/Pneumatic	0.5000	0.2038	0.3098	0.4049	0.1170	0.6422	0.4207	0.5151	0.9031
Fuel	0.4126	0.4613	0.5103	0.6684	0.3843	0.5292	0.5196	0.5534	0.7027
Instruments and Indicators	0.4767	0.6825	0.7127	0.6658	0.8235	0.7725	0.8330	0.8916	0.8817
Computer (CADC)	0.5000	0.8152	0.9301	1.0810	0.7027	0.8024	1.0500	1.0290	0.9993
Autopilot Assist	0.3353	0.4582	0.6970	0.6074	0.3916	0.1798	0.7060	0.6930	0.5611
UHF	0.4126	0.6130	0.7187	0.7658	0.8893	0.9915	0.9248	0.9332	0.9485
IFF	0.8106	0.8216	0.8377	0.8540	0.7320	0.8647	0.9460	0.9240	0.9004
TACAN	0.3936	0.5940	0.6040	0.6619	0.8344	1.0260	0.8937	0.8547	0.8329
ADF	0.4490	0.8247	0.8335	0.9735	0.6222	1.2913	0.9460	0.9240	0.8951
Navigation Computer	0.8893	0.7584	0.7731	0.8047	0.5124	0.7206	0.7766	0.7715	0.7481

*Tabulation by system of ratio of failure probability for each mission phase with respect to the mission failure probability, $1 - e^{-\frac{\text{No. Failures}}{\text{No. Flights}}}$ (Data were collected from VF-121 flights at Miramar Naval Air Station.)

**See footnote at bottom of Page 2-5.

2.3 MODEL DEVELOPMENT

At the outset of this program. it was anticipated that the existing Air Force flight safety model could be adapted in a limited-utility format for routinely processing Navy data to arrive at flight safety measurements. The initial idea was to use the total number of failures and the total flying hours to arrive at an average MTBF, and from this to compute the probability of failure. The latter quantity, together with the sensitivity estimate, would then provide a meaningful malfunction exposure and/or a cident exposure index. Upon investigation, however, the available information was found to be inadequate and inaccurate. Recognizing this factor, the Naval Safety Center agreed that, rather than have an early model with these properties, it would be far more desirable to embark upon an investigation to determine how best to arrive at an accurate model.

The first step in the subsequent activity was the initiation of a sample data collection program at Miramar. This effort resulted in obtaining actual equipment malfunction exposure measurements from which the basic factors affecting malfunction occurrence could be examined.

The construction of a safety analysis/criticality assessment model responsive to both the probability of failure and the significance (sensitivity) of each occurrence and be exercisable with 3M data was successfully completed. In equation form, the criticality of each Work Unit Code (WUC) is assessed as follows:

$$\overline{C} = \sum_{n=1}^{n=q} \left[\left(1 - \epsilon^{\frac{F}{f}} \right) m_n \, q \, S_n \right]$$

where: $\overline{C}$ = total criticality of the Work Unit Code

n = mission phase number*

m_n = failure probability correction factor computed from the VF-121 data (Table 1)

q = provisory factor discussed in Section 2.5

S_n = mission phase sensitivity of the failure

F = number of 3M reported failures

f = number of flights over which the 3M data was collected.

This equation, then, represents the probability that a piece of equipment will cause accident exposure in an aircraft flying an average mission profile (i.e., a mission made up of the nine mission phases is considered to be of about 100 minutes duration).

---

*Mission Phases are numbered as follows:

1 - Start and Taxi	4 - Cruise - Out	7 - Descent
2 - Takeoff	5 - Bombing, Air-to-Air, etc.	8 - Land
3 - Climb	6 - Cruise - Return	9 - Taxi-Shutdown

The criticality of each WUC is computed for each functional path that has a safety effect. The resulting quantity can then be applied to rank the WUC's in order of their safety criticality and therefore their current importance (on the basis of 3M data) with respect to flight safety.

2.4 FUNCTIONAL ANALYSIS

The first step in generating equipment criticality indices for pinpointing aircraft safety problems was to identify the primary functions of the F-4J aircraft. The aircraft was first subdivided into nine primary and two support functions, the latter functions being "Utilities" and "Pilot." Designated as primary functions were those generally common to all aircraft and for which the necessity is readily apparent in each flight phase. These primary functions, which can be identified independently of the equipment necessary to perform them, represent the tasks that the equipments perform. The support functions are more equipment-oriented. For example, under the primary function "External Environmental Control" the aircraft was divided into three functional groups: "Anti-Ice," "Lighting," and "Rain Clear." These groups were then further subdivided and charted into functional diagrams depicting 1) the various events necessary to achieve them, and 2) the inputs from other functions. In general, these diagrams are laid out showing, from left to right, the inputs, the function performed, the outputs, and the events achieved.

The next step was to identify the items of equipment required to accomplish each subfunction or function. Equipment identification is normally made at the WUC level, thereby identifying how a WUC contributes to the accomplishment of a function.

Each function of the aircraft carries an indentured "alpha" code indicating the primary safety sensitivity path, thus serving as an index for machine locating purposes. The diagram of Figure 2, for example, identifies the Aircraft Roll function as CC, which requires inputs from CCA-R and CCA-L, the right and left wing control surfaces, respectively. Because of the complexity of aircraft systems and the interdependency of one system on another, no consistent universal indenture system (from function to subfunction, etc.) is possible. One example of the problem, as can be seen in several of the diagrams in Appendix A, is the formation of functional loops. If all the diagrams applicable to an aircraft were combined, the total diagram would be so tangled with these loops that no meaningful analysis could be made. Accordingly, ARINC Research elected to follow the procedure of subdividing the aircraft into the nine primary and two support functions, identifying the input requirements for each and recording each functional relationship in a punchcard format. This procedure was followed down to the WUC level. A computer program was designed that could identify and document each functional path.

Performing the path identification/documentation task by computer proved to be not only useful but necessary. As an example, for a single WUC in the flight control system, the computer identified and documented 182 functional paths in which this item affected the aircraft. The human analyst could never be expected to keep track of 182 functional paths or be expected to assign a numerical sensitivity to each. The machine processing allows the human analyst to consider only one functional link at a time. The ability to be able to follow all of the functional interrelationships within the aircraft is necessary for meaningful assessment of the safety.

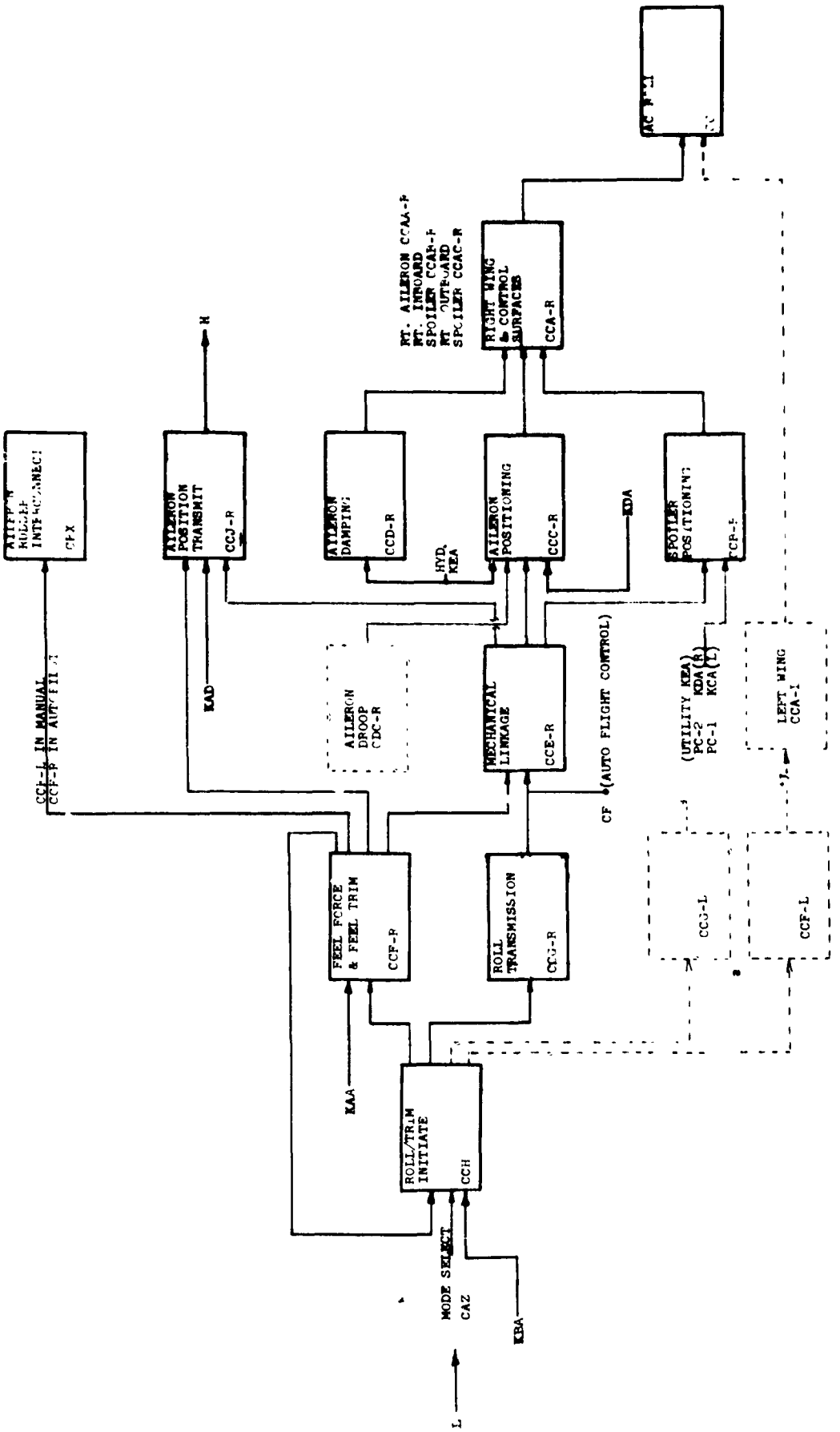

Figure 2

Aircraft: F-4J

Title: Functional Diagram
LATERAL CONTROL SYSTEM

Document: NAVAIR 01-[illegible] FDB-[illegible]

rev. date
1 Apr 1[illegible]

Date: [illegible] Apr 1[illegible]

Appendix A to this report contains the functional relationship diagrams applicable to the F-4J aircraft. Most of these diagrams have been revised since the publication of the second interim report (ARINC Research Publication 753-01-2-968) in April 1969. Revisions were necessary to reflect more clearly and accurately the interrelationships of the functions.

Following each section of functional diagrams in the appendix is a listing of the functional and WUC relationship cards for that section. This listing identifies the equipment required to accomplish each subfunction, and the functions required to accomplish the next higher level function. The functional-link safety sensitivities are included in the individual cards and in the format of the printout.

2.5 SENSITIVITY ASSESSMENT

The process of assigning sensitivity values consists primarily of evaluating how much a particular function is needed for the next higher function. At the functional level immediately below a primary function, sensitivities are assigned for each mission phase. The assigned value is from zero to one, representing an estimate of the percentage of the time that the loss of the function would result in an accident (a condition in which the aircraft cannot be operated within its prescribed performance parameters). By performing this process at the functional level, the assignment of relative values across these major functions can be made uniformly, according to their relative importance.

Each link was thus assessed until the major functions of the aircraft were reached. At this point the sensitivity of these highest level functions were assessed independently for each of the significant mission phases for the aircraft. For instance, the landing lights have a safety significance of zero for all mission phases other than landing. Each sensitivity value was reviewed by a group of ARINC Research analysts at least three times to assure uniformity of criteria and standardization of numerical assignments. These sensitivity values were included in each functional relationship card.

Certain systems have a safety significance dependent on external influences, and for this situation Provisory Factors are identified. An example of this would be a windshield anti-ice system, which has a safety significance of close to one during landing under icing conditions but has a zero significance on a dry, warm day. In this example, the significance is identified as unity (worst case), and a Provisory Factor is assigned. By application of these factors (for instance, assigning a percentage of the time that icing conditions are present), relative equipment sensitivites can be tailored to the conditions of a particular flight or geographic area. The provisory factors used in the sensitivity assessment of the F-4J are listed, together with their code identifiers, in Table 2.

The sensitivity of each functional link, together with applicable Provisory Factors, are compiled in punchcard format, permitting sensitivity computations (the multiplying of all sensitivities from the equipment along each path up to the major function) to be performed by computer. This allows the sensitivity of WUC's to be assessed, regardless of the complexity associated with multiple and duplicate path relationships.

TABLE 2. PROVISORY FACTORS USED IN SAFETY SENSITIVITY ASSESSMENT OF F-4J AIRCRAFT

Code	Provisory or Conditional Factors
A	Ice
D	Night
E	IFR
F	Supersonic
G	Rain
K	Normal system failed
N	Drag chute failed
P	Carrier takeoff
Q	Carrier landing
S	Wheel brakes failed

The functional path identification/documentation program discussed in Section 2.4 multiplied the "link" sensitivities at each step in the path for each mission phase. A computer printout showing the path and sensitivity values for each WUC cannot be included in this report because of the bulk of such a printout. However, Figure 3 is a reproduction of a typical printout page.

The path and the path sensitivity information is stored on magnetic tape and is suitable for demand interrogation on specific paths, functions, or WUC items. These data are used, in the criticality computations discussed in Section 2.6. A copy of this tape is being furnished to the Naval Safety Center.

2.6 CRITICALITY MODEL EXERCISE

Criticality assessment consists of 1) selection of the mission of interest--in this case, the average mission; 2) selection of the Provisory Factors for the applicable conditions; 3) inclusion of failure probability numbers; and 4) computation of the product of equipment failure probability and safety sensitivity (as modified by the Provisory Factor) for each phase of the mission. The criticality identified is then proportional to the accident exposure being created by each piece of equipment on the aircraft.

A criticality computation program was developed which would accept 3M failure data (by WUC); compute the mission probability of failure,

$$(1 - e^{-\frac{F}{f}});$$

apply the mission phase weighting factor; and multiply this value by the mission phase sensitivity.

WUC	ALPHA		ALPHA TITLE	COND FACT	ALT SYSTEM	SENSITIVITY BY FLIGHT PHASE IN PERCENT PH1	PH2	PH3	PH4	PH5	PH6	PH7	PH8	PH9
14218	CCAA	L	LEFT AILERON ASSEMBLY											
	CCA	L	LEFT WING CONTROL SURFACES											
	CC		AIRCRAFT ROLL											
	C		FLIGHT CONTROLS			00	90	60	60	60	60	60	90	00
14219	CCAA	R	RIGHT AILERON ASSY											
	CCA	R	RT WING CONTROL SURFACES											
	CC		AIRCRAFT ROLL											
	C		FLIGHT CONTROLS			00	90	60	60	60	60	60	90	00
14218	CCCC	L												
	CCC	L	AILERON POSITIONING											
	CCA	L	LEFT WING CONTROL SURFACES											
	CC		AIRCRAFT ROLL											
	C		FLIGHT CONTROLS			00	80	40	40	40	40	40	80	00
14218	CCCC	R	LAT CTRL ROD ASSY											
	CCC	R	AILERON POSITIONING											
	CCA	R	RT WING CONTROL SURFACES											
	CC		AIRCRAFT ROLL											
	C		FLIGHT CONTROLS			00	80	40	40	40	40	40	80	00
14221	CCDA	L	DAMPER CYLINDER ASSY											
	CCD	L	AILERON DAMPING											
	CCA	L	LEFT WING CONTROL SURFACES											
	CC		AIRCRAFT ROLL											
	C		FLIGHT CONTROLS			00	90	10	10	10	10	10	90	00
14221	CCDA	R	DAMPER CYLINDER ASSY											
	CCD	R	AILERON DAMPING											
	CCA	R	RT WING CONTROL SURFACES											
	CC		AIRCRAFT ROLL											
	C		FLIGHT CONTROLS			00	90	10	10	10	10	10	90	00
14222	CCCA	L	AILERON POWER CONTROL CYL											
	CCC	L	AILERON POSITIONING											
	CCA	L	LEFT WING CONTROL SURFACES											
	CC		AIRCRAFT ROLL											
	C		FLIGHT CONTROLS			00	80	40	40	40	40	40	80	00

Figure 3. Example: Functional Path Sensitivity Printout

The mission phase criticalities are then summed over the mission to obtain the total mission criticality. Criticalities were computed for each WUC alpha designator (i.e., each individual component) by dividing the total number of failures by the number of alpha designators, thereby treating each as a separate item. The WUC criticality for those items where more than one item of that WUC is installed, is then the summation of the criticalities for each alpha designator applicable to that WUC.

The Naval Safety Center supplied the failure and flight data for the 12 months of May 1968 through April 1969, and a criticality model exercise was completed. Appendix B contains the results of this model exercise. The flow chart and program listing are contained in Appendix C. For purposes of this model exercise, all provisory factors were set to zero. Therefore the criticalities in Appendix B are representative of a "perfect" mission environment with field takeoff and landing and the presumption that emergency backup systems are available but not needed.

3. CONCLUSIONS

The use of the criticality computation model with the monthly 3M data processing will permit not only identification of the current month's critical problems, but also allow for the examination of undesirable safety trends.

Thus a capability has been developed for providing flight-safety indicators sensitive to changes, in equipment malfunction rates, in their effects on the mission, and in unit or fleet operations. This methodology, in conjunction with accident data, permits timely predictions of accident potential; and can contribute to design evaluation and operational planning by providing a degree of safety assessment previously unavailable.

APPENDIX A

FUNCTIONAL ANALYSIS OF F-4J AIRCRAFT

A.1 GENERAL

This appendix contains the results of the functional analysis performed by ARINC Research for the F-4J aircraft. The tab locators identify nine primary and one secondary functional aircraft system (no diagram is included for the "Pilot"). The functional sections are lettered and the pages numbered according to function level. The title block on each functional diagram identifies the NAVAIR documents (including dates) used in construction of the functional diagram. In cases where the NAVAIR document described several configurations for aircraft block groups, the latest configuration was used for the diagram.

Wherever possible, diagrams are laid out with the inputs on the left side of the page and continuing through the sequence of events to the final function on the right side of the page. Unlike a reliability block diagram, in which blocks in series indicate a tying together physically of equipments, the series of blocks in these diagrams will indicate that if all of the input events to the left of a block occur, and the equipment unique to the functional block is operating, then that function will have been performed.

A form of shorthand logic symbology was used to depict the functional relationships, in which each input to a functional block which enters with a unique arrowhead can be considered AND functions, and inputs whose function lines are joined prior to the arrow entering the next functional block can be considered OR functions. Figure A-1 represents this relationship.

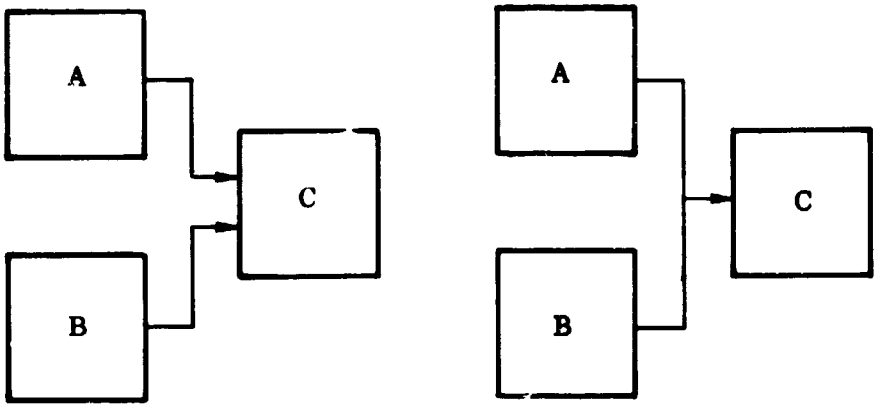

A and B are needed for C.

A or B is needed for C.

Figure A-1

A.2 ORGANIZATION

The functional description portion of this appendix is divided into ten sections. The first section describes the aircraft, in general. This diagram depicts the primary aircraft functions, together with the alpha designator assigned to each. For instance, the alpha designator "A" will prefix all functions and equipments associated with ground control of the aircraft, all of which will be found behind Tab A, Ground Control. On the tab sheet will be the functional breakdown of the primary function, together with a listing of the order in which the diagrams will appear. Following the diagrams in each section will be a computer listing of the function cards, showing inputs required and dependent functions; and of work unit codes, together with the function and in the functional chain to which the WUC operation contributes. The WUC's used to identify equipment types are as documented in NAVAIR 01-245FD-8, revised 1 June 1968.

If more than one piece of equipment with the same WUC is installed in the aircraft, each will be identified with a different alpha designator. If the same piece of equipment performs more than one function or operates in more than one functional branch, it would maintain only one alpha designator for all of the applications. This, therefore, provides a method for determining whether one piece of equipment has many effects, or whether many pieces of the same equipment are used in the aircraft, each providing one or many different effects.

The following page provides a guide for reading the printouts in this appendix.

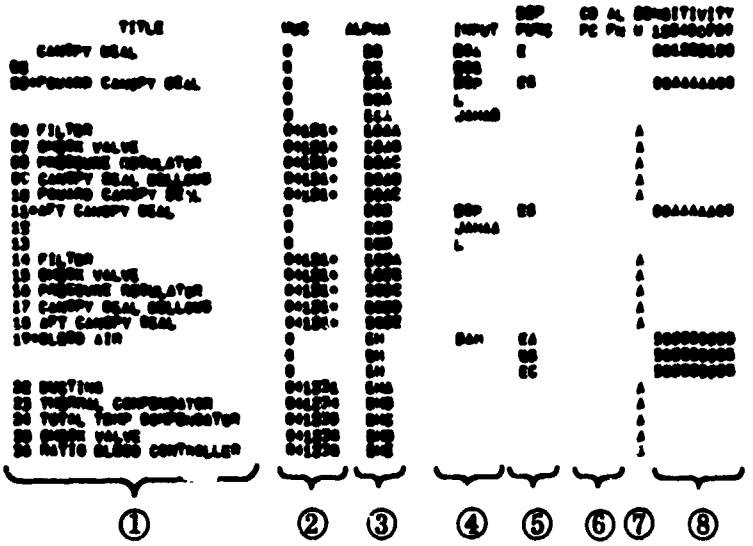

① Function or Equipment Name

② Work Unit Code Number

③ "Alpha" Designator for WUC or Function (may be preceded by an R or L indicating right and left)

④ Functional "Inputs" Required

⑤ Dependent Functions of Function listed under "Alpha"

⑥ Conditional or Provisory Factor and Alpha Designator for alternate function if applicable

⑦ Sensitivity value for WUC with respect to function listed above it. (Values are A = 1.0, 9 = 0.90, 8 = 0.80, etc.)

⑧ Functional Sensitivity with respect to the listed dependent function by Mission Phase

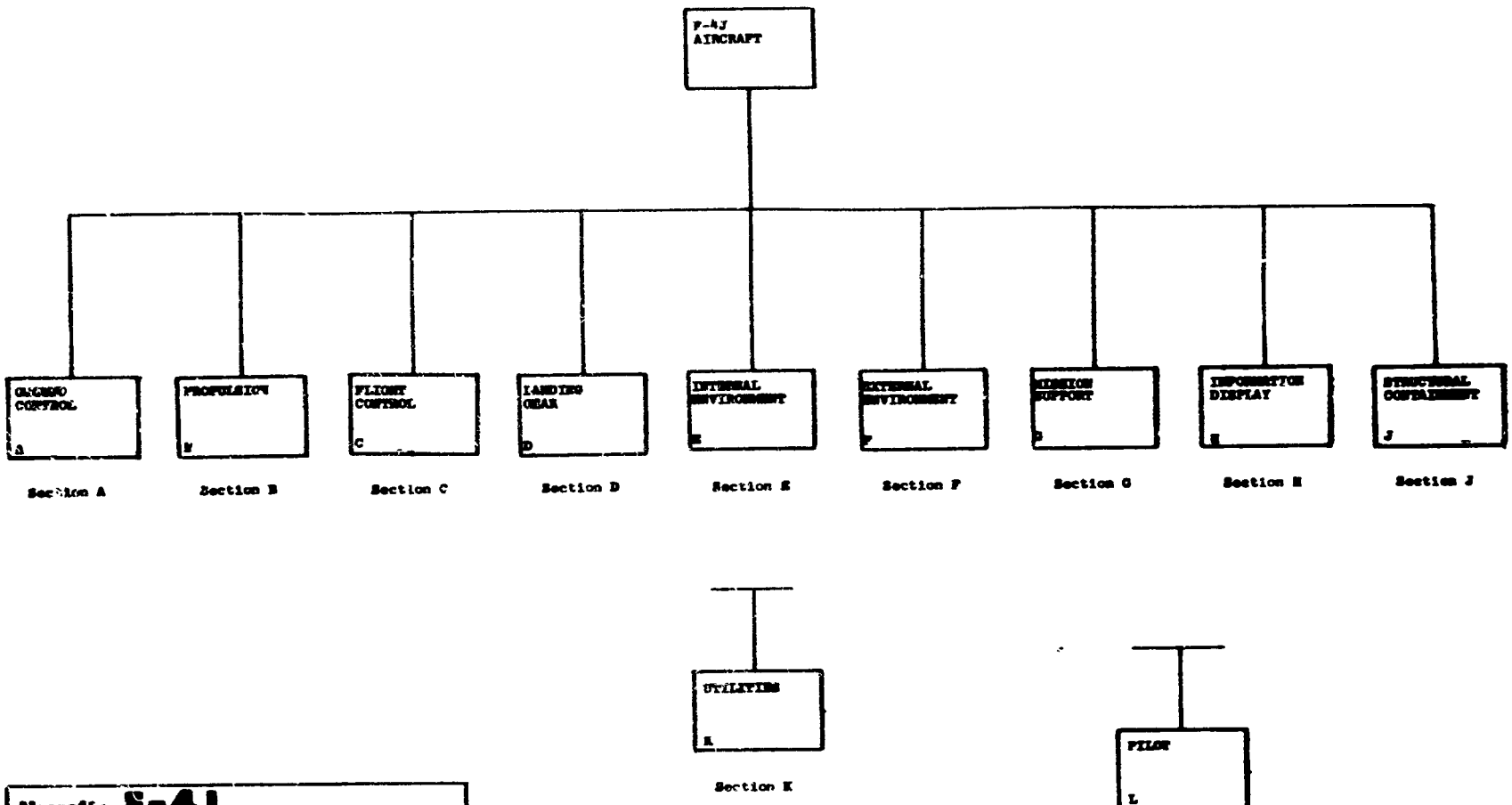

Aircraft: F-4J	
Title: Functional Diagram AIRCRAFT, GENERAL	
Document: NA	rev. date: NA
Date: 23 Apr 1969	

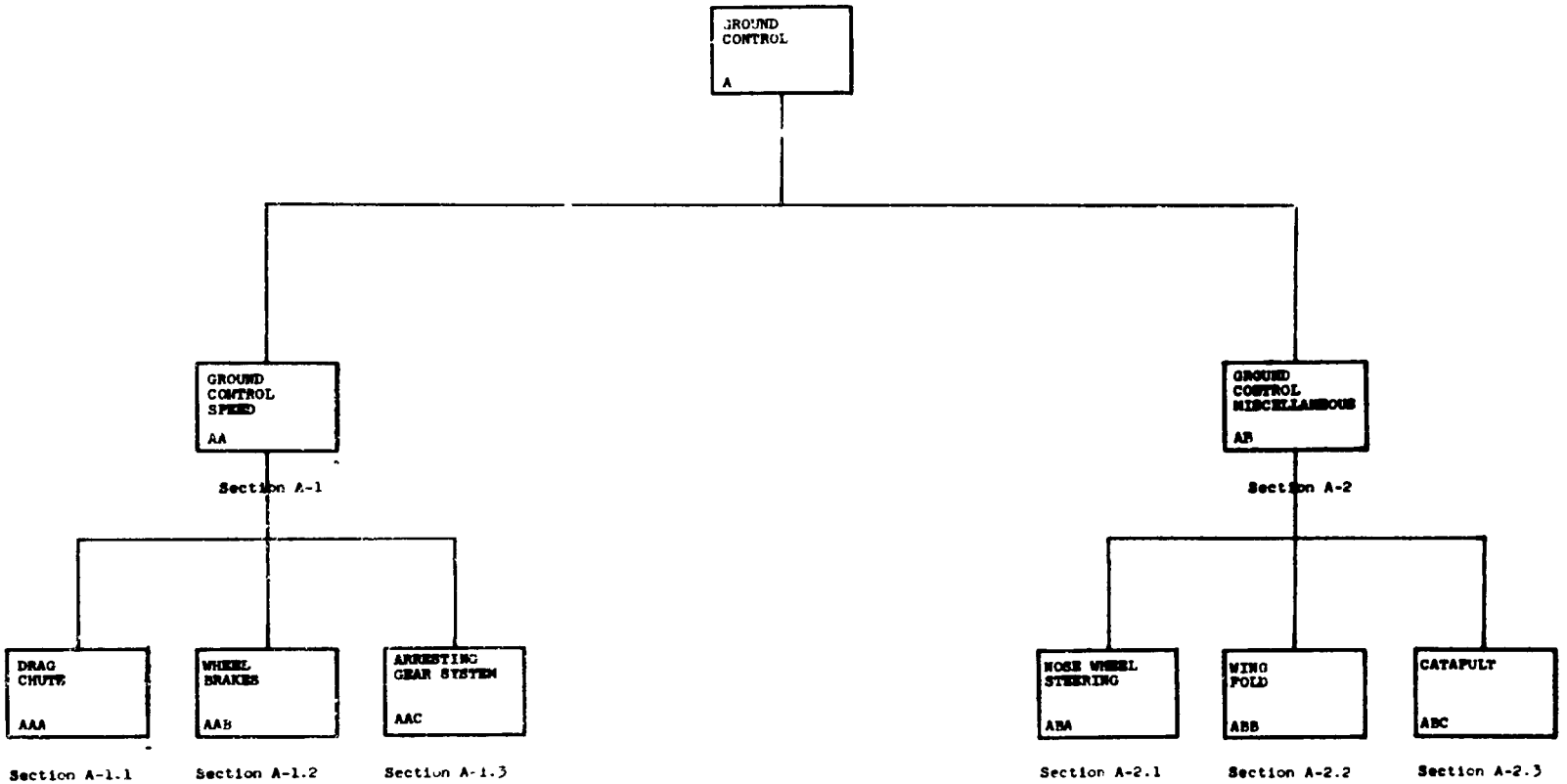

Aircraft: F-4J	
Title: Functional Diagram GROUND CONTROL SECTION	
Document: NA	**rev. date** NA
Date: [illegible]	

Section A

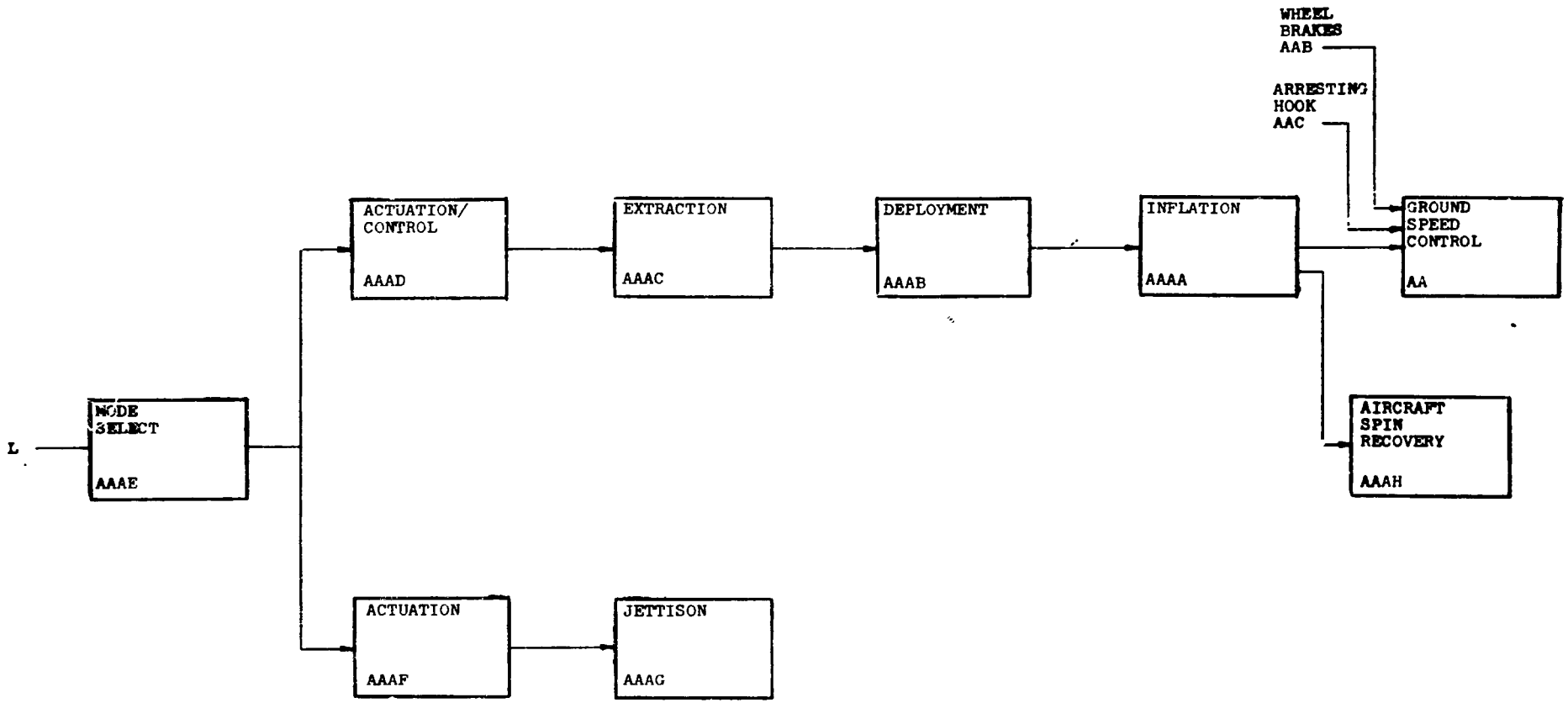

Aircraft: F-4J

Title: Functional Diagram
DRAG CHUTE SYSTEM (AAA)

Document: NAVAIR 01-24-FDB-2-2.3 **rev. date** 15 Jun 1968

Date: 23 Apr 1969

ARINC

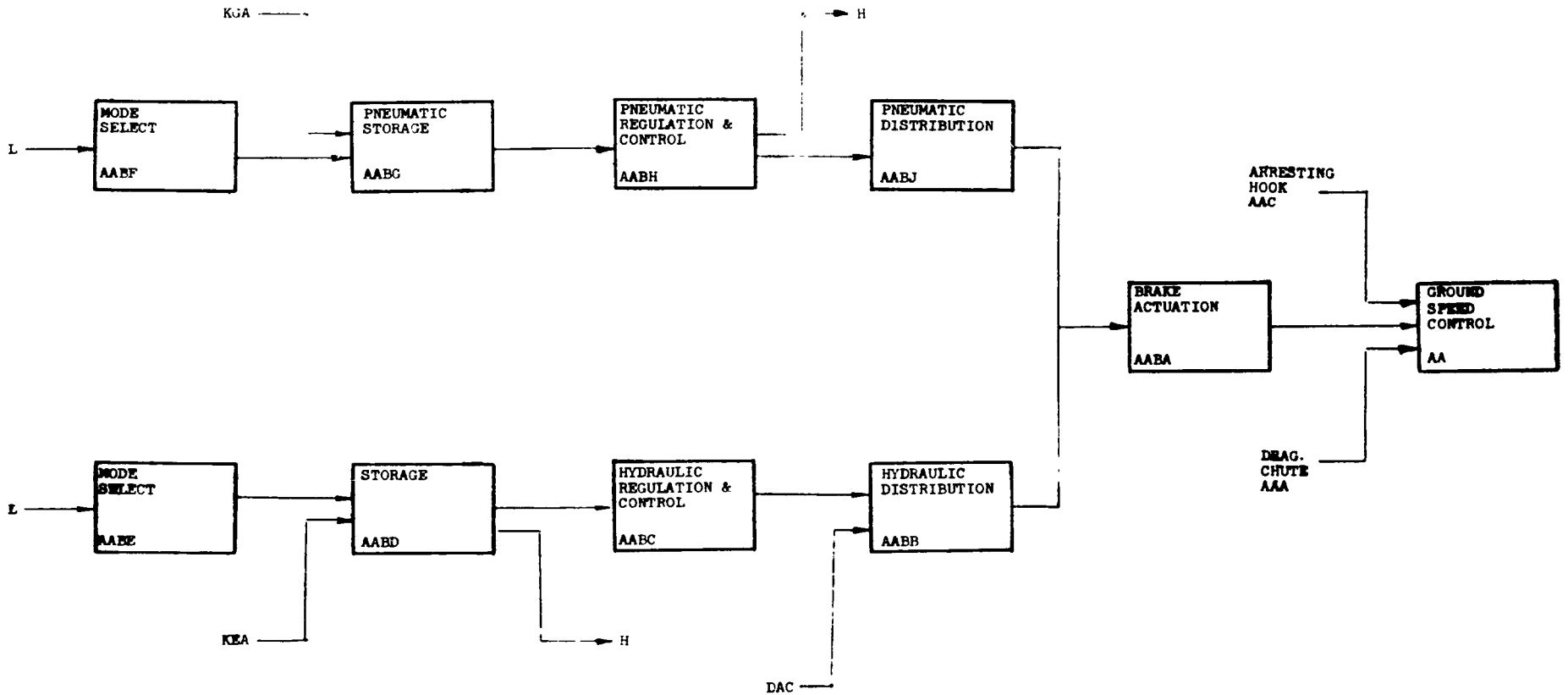

Aircraft: F-4J	
Title: Functional Diagram	
WHEEL [illegible] SYSTEM	
Document:	**rev. date**
[illegible]	[illegible]
Date: [illegible]	

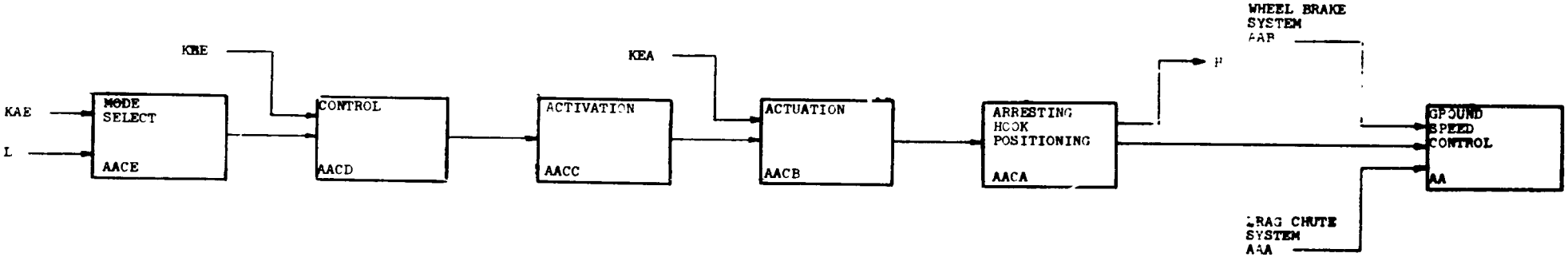

Aircraft: F-4J

Title: Functional Diagram

ARRESTING GEAR SYSTEM (AAC)

Document: **rev. date**

Date:

ARINC

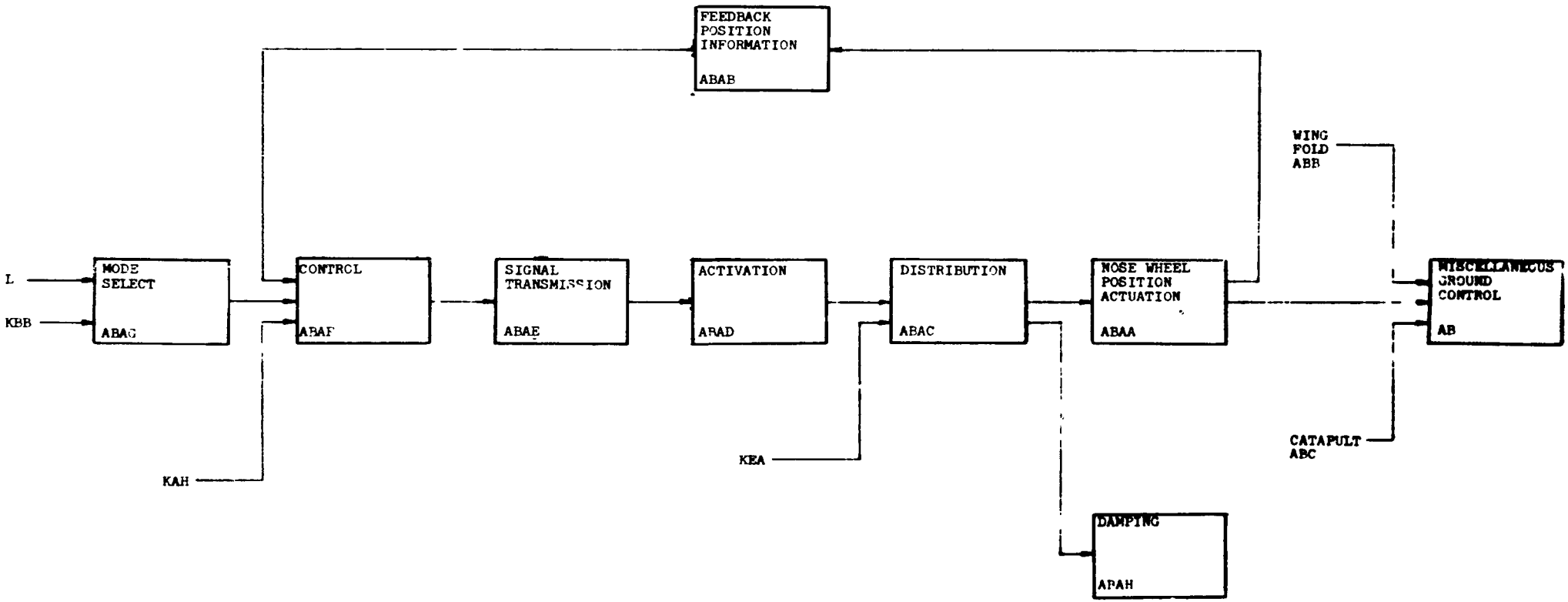

Aircraft: F-4J	
Title: Functional Diagram NOSE WHEEL STEERING SYSTEM	
Document:	**rev. date**
Date:	

Section A-2.1

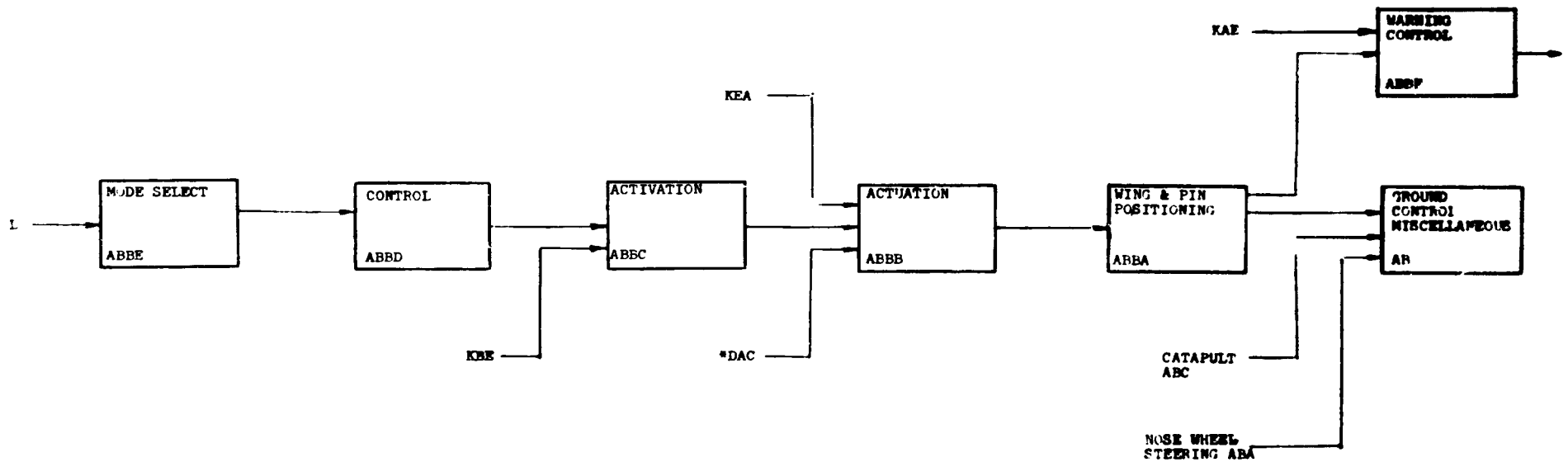

Aircraft: F-4J

Title: Functional Diagram

Document: **rev. date**

*NOTE: DAC [illegible] gear [illegible] line, KEA [illegible] draulic distri- [illegible] are shown because [illegible] are needed for actua- [illegible]

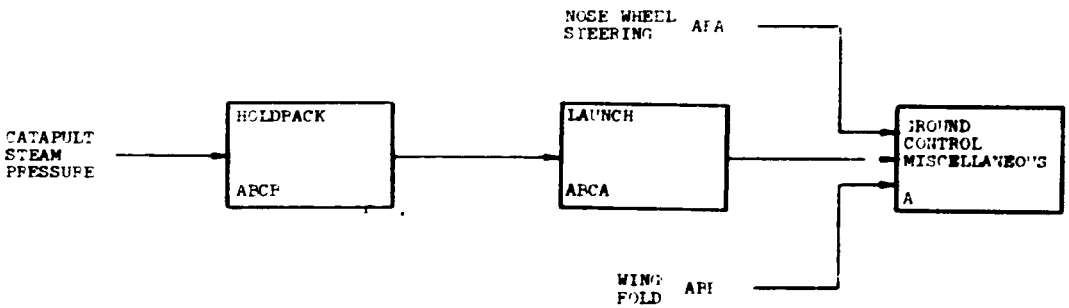

Aircraft:	**F-4J**
Title:	**Functional Diagram**
Document:	**rev. date**
Date:	

ARINC

	TITLE	WUC	ALPHA	INPUT	DEP FUNC	CD FC	AL FN	SENSITIVITY M 123456789
	GROUND SPEED CONTROL	1	AA	AAAA				300000003
37		1	AA	AAJ				
37		1	AA	AAL				
	*DRAG CHUTE INFLATION	1	AAAA	AAAR	AA	KCAABA		020000040
	DRAG CHUTE INFLATION	1	AAAA		AAAH			000222000
40	DRAG CHUTE CANOPY	193811210	AAAAA				A	
	DRAG CHUTE DEPLOYMENT	1	AAAR	AAAC	AAAA			AAAAAAAAA
42	RISER	193811220	AAABA				6	
43	RISER LINES	193811260	AAABC				5	
	DRAG CHUTE EXTRACTION	1	AAAC	AAAD	AAAB			AAAAAAAAA
45	PILOT CHUTE	193811290	AAACA				A	
46	BRIDLE	193811240	AAACB				A	
47	CHUTE CONTAINER BAG	193811	AAACC				A	
	DRAG CHUTE ACTUATION-CONTROL	1	AAAD	AAAE	AAAC			AAAAAAAAA
49	CHUTE DOOR	193813	AAADA				A	
50	ACTUATOR	193814	AAADB				A	
51	DOOR LATCH MECHANISM	193816	AAADC				A	
52	DOOR HINGE	193815	AAADD				A	
53	RELEASE CABLE	193112	AAADE				A	
54	HOOK ASSEMBLY	193113	AAADF				A	
55	LOCK MECHANISM	193114	AAADG				A	
56	CABLE FAIRLEAD/PULLEY	193115	AAADH				A	
57	TORQUE TUBE ASSEMBLY	193116	AAADJ				A	
58	ROD ASSEMBLY	193118	AAADK				A	
59	CAM ATTACH LINK	19311A	AAADL				A	
60	BELLCRANK ASSY	19311B	AAADM				A	
	MODE SELECT	1	AAAE	L	AAAD			AAAAAAAAA
		1	AAAE		AAAF			080000000
63	DRAG CHUTE HANDLE	193111	AAAEA				A	
	JETTISON ACTUATION	1	AAAF	AAAE	AAAG			AAAAAAAAA
65	RELEASE EXT SPRING	193117	AAAFA				A	
66	RELEASE MECHANISM KEEPER	19311C	AAAFH				A	
67	RELEASE SWITCH	19311D	AAAFC				A	
68	*BRAKE ACTUATION	1	AABA	AABJ	AA	CN		100000051
		1	AABA	AABR				
70	WHEEL BRAKE ASSEMBLY	113418	RAABAA				A	
71	WHEEL BRAKE ASSEMBLY	113418	LAABAB				A	
	HYDRAULIC DISTRIBUTION	1	AABB	AABC	AARA			999999999
73		1	AABB	DAL				
74	CHECK VALVE-HYD RETURN-A/S	11341*	RAABRA				A	
75	CHECK VALVE-HYD RETURN-A/S	11341*	LAABRB				A	
76	TWO WAY RESTRICTOR	11341*	AABBC				A	
77	CHECK VALVE-HYD INLET	11341*	AABBD				A	
78	CHECK VALVE-ANTI SPIN	11341*	AABBL				A	
79	HYD FILTER	11341B	AABBF				A	
80	TUBING	11341*	AABBG				A	
	HYD REGULATION + CONTROL	11341*	AABC	AABD	AARB			AAAAAAAAA

	TITLE	WUC	ALPHA	INPUT	DEP FUNC	CD FC	AL FN	SENSITIVITY M 123456789
82	ONE WAY RESTRICTOR-INLET	11341*	RAABCA				A	
83	ONE WAY RESTRICTOR-INLET	11341*	LAABCB				A	
84	ONE WAY RESTRICTOR-RETURN	11341*	RAABCC				A	
85	ONE WAY RESTRICTOR-RETURN	11341*	LAABCD				A	
86	BRAKE CONTROL VALVE	113411	RAABCK				A	
87	BRAKE CONTROL VALVE	113411	LAABCF				A	
	STORAGE	1	AABD	AABF	AABC			AAAAAAAAA
89		1	AABD	KEA	H			AAAAAAAAA
90	AIR CHARGE VALVE	11342*	AABDA				A	
91	ACCUMULATOR	113425	AABDB				A	
	MODE SELECT	1	AABF	L	AABG			AAAAAAAAA
93	BRAKE PEDAL	11341C	RAABFA				A	
94	BRAKE PEDAL	11341C	LAABFB				A	
95	RUDDER PEDAL LINKAGE	113412	RAABFC				A	
96	RUDDER PEDAL LINKAGE	113412	LAABFD				A	
97	BELLCRANK	113414	RAABFE				A	
98	BELLCRANK	113413	LAABFF				A	
	MODE SELECT	1	AABE	L	AABD			AAAAAAAAA
40	HANDLE	113421	AABFA				A	
41	LINKAGE	113423	AABFB				A	
	PNEUMATIC STORAGE	1	AABG	AABF	AABH			AAAAAAAAA
43		1	AABG	KGA				
44	VENT RELIEF VALVE	11342*	AABGA				A	
45	AIR BOTTLE	113424	AABGB				A	
	PNEU REG + CONTROL	1	AABH	AABG	AARJ			AAAAAAAAA
		1	AABH		H			000000010
48	AIR SELECTOR VALVE	113422	AABHA				A	
49	CHECK VALVE	11342*	AABHB				A	
	PNEUMATIC DISTRIBUTION	1	AABJ	AABH	AARA			AAAAAAAAA
81	FILTER-SCREEN	11342*	AABJA				A	
82	PNEUMATIC LINES	11342*	AABJB				A	
	*ARRESTING HOOK POSITIONING	1	AACA	AACB	AA	JN		010000040
		1	AACA		H			030000010
03	HOOK AND FAIRING ASSY	113820	AACAA				A	
	VERTICAL DAMPER CYLINDER	113811	AACAB				A	
05	HORIZONTAL DAMPER	113816	RAACAC				5	
06	HORIZONTAL DAMPER	113816	LAACAD				5	
07	CENTERING SPRING CYL ASSY	113816	RAACAE				5	
08	CENTERING SPRING CYL ASSY	113816	LAACAF				5	
09	AIR-OIL MANIFOLD	113819	AACAG				A	
10	AIR CHARGE VALVE	113814	AACAH				A	
	ACTUATION	1	AACB	AACC	AACA			AAAAAAAAA
12		1	AACB	KEA				
13	BLEEDER PLUG	11381*	AACBA				A	
14	TWO WAY RESTRICTOR	11381*	AACBB				A	
15	HOOK UPLATCH MECHANISIM	11381C	AACBC				A	
16	TUBING	11381*	AACBD				A	
	ACTIVATION	1	AACC	AACD	AACB			AAAAAAAAA

	TITLE	WUC	ALPHA	INPUT	DEP FUNC	CD FC	AL PN	SENSITIVITY M 1234567890
18	SOLENOID SELECTOR VALVE	113863	AAGCA				A	
19	CHECK VALVE	11386•	AAGCB				A	
20	TIME DELAY RELAY PANEL CONTROL	11386•	AAGCC				A	
		1	AAGD	AAGE	AAGC			AAAAAAAAA
		1	AAGD	HRL				
23	BURGL DAMPER	113812	AAGDA				A	
24	5 AMP FUSE	11381•	AAGDB				A	
25	ARRESTING GEAR CONTROL BX	11381N	AAGDC				A	
26	CONTROL CABLE ASSY	11381•	AAGDD				A	
27	PULLEYS-FAIRLEAD.	11381•	AAGDL				A	
	HOOK SELECT	1	AAGE	KAH	AAGJ			AAAAAAAAA
29		1	AAGE	L				
30	CONTROL LEVER	113918	AAGEA				A	
31	LEVER WARNING LITE	113841	AAGEH				A	
32	HOOK DOWN LIMIT SWITCH	113832	AAGEC				A	
33	HOOK UP LIMIT SWITCH	113831	AAGEJ				A	
34	WARNING LITE SWITCH	113843	AAGEB				A	
35	5 AMP FUSE	11383•	AAGEF				A	
	•MISC GROUND CONTROL	2	AB	ARAA				182222271
		2	AR	ADW				
		2	AB	ARC				
	•NOSE WHEEL POSITION ACTUATOR		ARAA	ARAC	ABAB			AAAAAAAAA
		2	ARAA		AB			AA0000AAA
01	STEERING POWER UNIT	213342	ARAAA				A	
02	SERVO VALVE	213348	ARAAH				A	
03	COLLAR/GEAR ASSEMBLY	213348	ARAAC				A	
	FEEDBACK POSITION INFO	2	ABAR	ARAA	ABA•			AAAAAAAAA
05	FOLLOW UP POTENTIOMETER	213347	ABARA				A	
	DISTRIBUTION	2	ABAC	ARAD	ABAA			AAAAAAAAA
		2	ABAC	KFA	ABAH			AAAAAAAAA
07	SELECTR VLV RETURN FLW VLV	21334•	ARACA				A	
08	TWO WAY RESTRICTOR	21334•	ARACH				A	
09	PRESS CHECK VLV-A6	21334•	ABACC				A	
10	PRESS CHECK VLV-63	21334•	ABACD				A	
11	FILTER ASSY	213346	ARACE				A	
	ACTIVATION	2	ARAD	ARAE	ABAC			AAAAAAAAA
13	SELECTOR VALVE	21334A	ARADA				A	
	SIGNAL TRANSMISSION	2	ARAE	ARAF	ABAD			AAAAAAAAA
15	ACCELAROMETER POWER RELAY	21334•	ABAEA				A	
16	COMMAND POTENTIOMETER	21334•	ARAER				A	
17	AUX AIR DOOR RELAY	21133•	WEFA				A	
	CONTROL	2	ABAF	ARAG	ABAI			AAAAAAAAA
19		2	ARAF	AHAR				
19		2	ARAF	KAH				
20	CONTROL UNIT	213343	ARAFA				A	
21	LNDNG GEAR CONTROL SWITCH	213112	DADR				A	
22	ROTIONAL PICKUP TRANSDUCER	21334N	ARAFC				A	
23	HMLG SCISSOR SWITCH	21323•	RDABAAA				A	

	TITLE	WUC	ALPHA	INPUT	DEP FUNC	CD FC	AL PN	SENSITIVITY M 1234567890
24	NOSE GEAR DOWN LIMIT SWITCH	213143	DAARAA				A	
	MOOF SELECT	2	ARAG	KAB	ABAH			AAAAAAAAA
		2	ARAG	L				
27	NOSE WHEEL STEERING SWITCH	21334L	ARAGA				A	
28	RUDDER PEDAL	214428	RARAGH				A	
29	RUDDER PEDAL	214428	LARAGC				A	
30	TORQUE TUBE	21334C	ARAGU				A	
31	DAMPING	2	ARAH	ARAC				0A0000040
32	POWER UNIT COMPENSATOR	213341	ARAHA				A	
33	COMPENSATOR CHECK VALVE	21334•	ARAHB				A	
34	•LAUNCH	2	ARCA	AHLH	AB			070000000
35	LAUNCH/TOW HOOK	213811	RARCAA				A	
36	LAUNCH/TOW HOOK	213811	LARCAH				A	
37	HOLDBACK	2	ARCB		ABCA			0A0000000
38	HOLDBACK FITTING	213812	ARCBA				A	
39	TENSION BAR	213813	ARCBB				A	
41	•WING AND PIN POSITIONING	2	ARBA	ABBR	AB			044404450
		2	ARBA		ABAA			AAAAAAAAA
43	WINGFOLD PIN PULL CYLINDER	214811	RABBAA				A	
44	WINGFOLD PIN PULL CYLINDER	214811	LABBAH				A	
45	WING HINGE	21481•	RARBAC				A	
46	WING HINGE	21481•	LARBAC				A	
47	W/F PIN ACTUATOR BAR	214818	RABBAL				A	
48	W/F PIN ACTUATOR BAR	214818	LABBAF				A	
	ACTUATION	2	ABBB	ABBC	ABBA			AAAAAAAAA
50		2	ABBB	KFA				
50		2	ABBB	DAC				
51	WINGFOLD ACTUATOR CYLINDER	214812	RABBBA				A	
52	WINGFOLD ACTUATOR CYLINDER	214812	LABBBH				A	
53	TWO WAY RESTRICTOR-SPREAD	21481•	RABBBC				A	
54	TWO WAY RESTRICTOR-FOLD	21481•	RABBBD				A	
55	TWO WAY RESTRICTOR-SPREAD	21481•	LABBBL				A	
56	TWO WAY RESTRICTOR-FOLD	21481•	LABBBF				A	
	ACTIVATION	2	ABBC	ABBD	ABBB			AAAAAAAAA
58		2	ABBC	KAL				
59	PIN PULL SELECTOR VALVE	214814	RABBCA				A	
60	PIN PULL SELECTOR VALVE	214814	LABBCB				A	
61	WINGFOLD SELECTOR VALVE	214815	RABBCC				A	
62	WINGFOLD SELECTOR VALVE	214815	LABBCU				A	
	CONTROL	2	ABBD	ARBE	ABBC			AAAAAAAAA
64	WING SPREAD LIMIT SWITCH	214823	RABBDA				A	
65	WING SPREAD LIMIT-SWITCH	214823	LABBDB				A	
66	WING PIN OUT LIMIT SWITCH	214822	RABBDC				A	
67	WING PIN OUT LIMIT SWITCH	214822	LABBDD				A	
68	MANUAL PIN OUT LIMIT SW	21482•	RABBDE				A	
69	MANUAL PIN OUT LIMIT SW	21482•	LABBDF				A	
70	LOCKPIN IN LIMIT SWITCH	214822	RABBDG				A	
71	LOCKPIN IN LIMIT SWITCH	214822	LABBDH				A	

	TITLE	WUC	ALPHA	INPUT	DISP FUNC	CD AL FC PN	SENSITIVITY 1234567890
	MODE SELECT	2	A00E	L	A00M.		AAAAAAAAAA
73	WINDFOLD CONTROL SWITCH	214039	A00EA				A
74	WINDFOLD CONTROL 00M	21401A	RA00EB				A
75	WINDFOLD CONTROL A0M	21401A	LA00EC				A
76	LOCKPIN CONTROL +00	21401•	RA00FU				A
77	LOCKPIN CONTROL -00	21401•	LA00EE				A
78	MANUAL LOCKPIN HANDLE	214018	A00EF				A
	WARNING CONTROL	2	A00F	A*0A	M		AAAAAAAAAA
80		2	A00F	KAL			
81	FWD COCKPIT LITE TEST RELAY	21402•	RA00FA				A
82	AFT COCKPIT LITE TEST RELAY	21402•	RA00FB				A
83	FWD COCKPIT LITE TEST RELAY	21402•	LA00FC				A
84	AFT COCKPIT LITE TEST RELAY	21402•	LA00FU				A
85	FWD COCKPIT LITE	21402•	RA00FE				A
86	AFT COCKPIT LITE	21402•	RA00FF				A
87	FWD COCKPIT LITE	21402•	LA00FG				A
88	AFT COCKPIT LITE	21402•	LA00FH				A

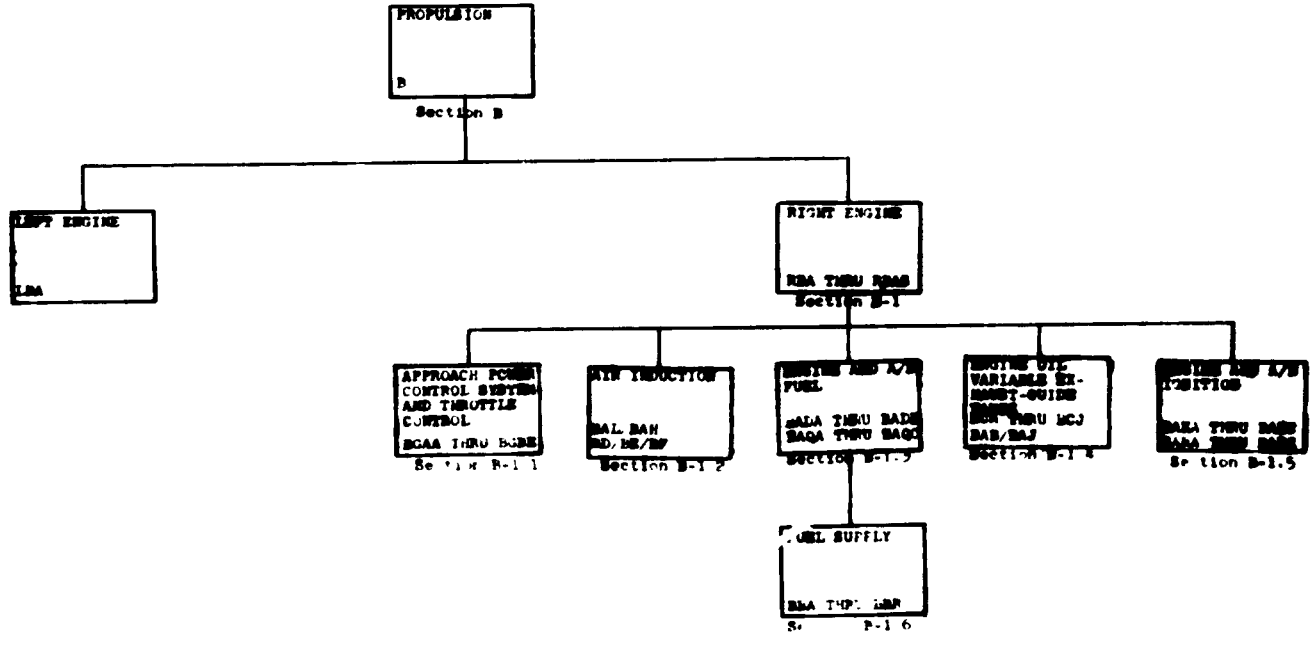

Aircraft: F-4J	
Title: Functional Diagram	
Document:	**rev. date**
Date:	

Revised

Section B

PROPULSION **B**

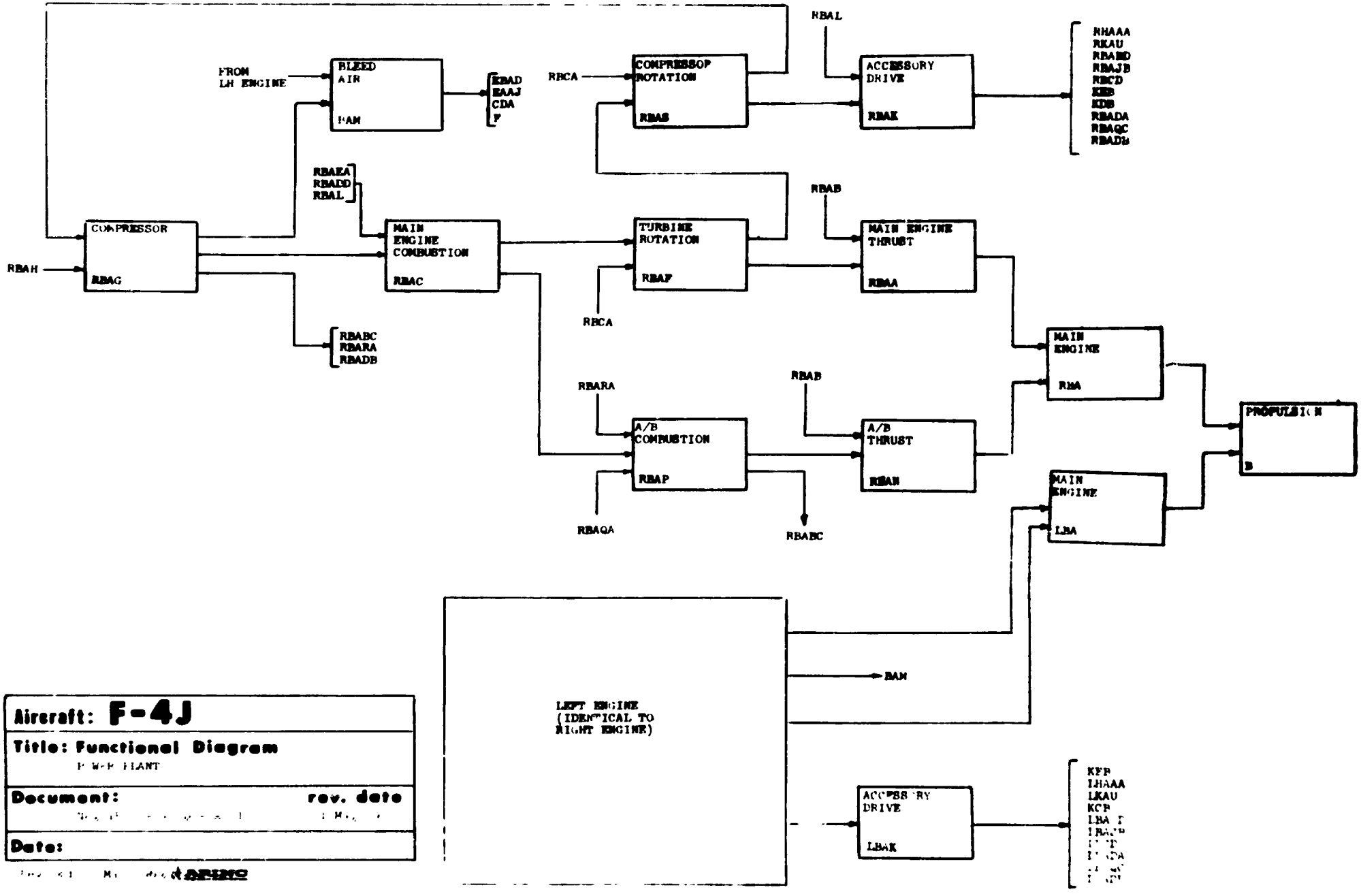

Aircraft: F-4J

Title: Functional Diagram

POWER PLANT

Document: **rev. date**

Date:

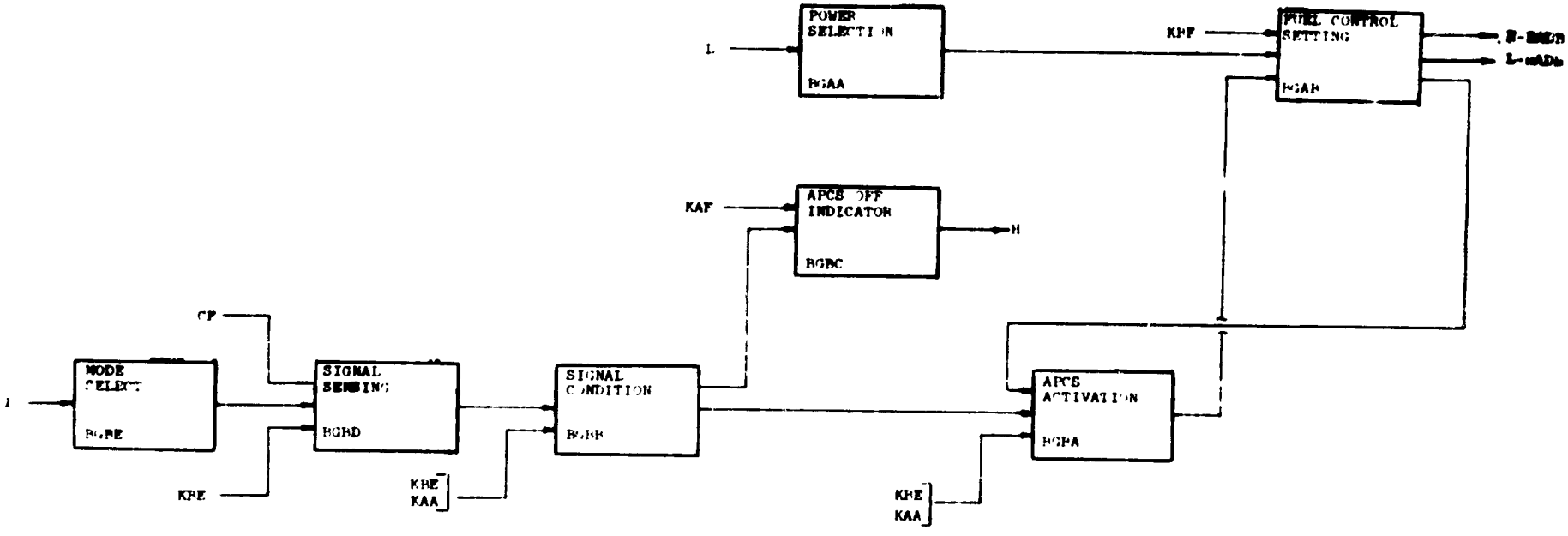

Aircraft: F-4J	
Title: Functional Diagram	
Document:	**rev. date**
Date:	

ARINC

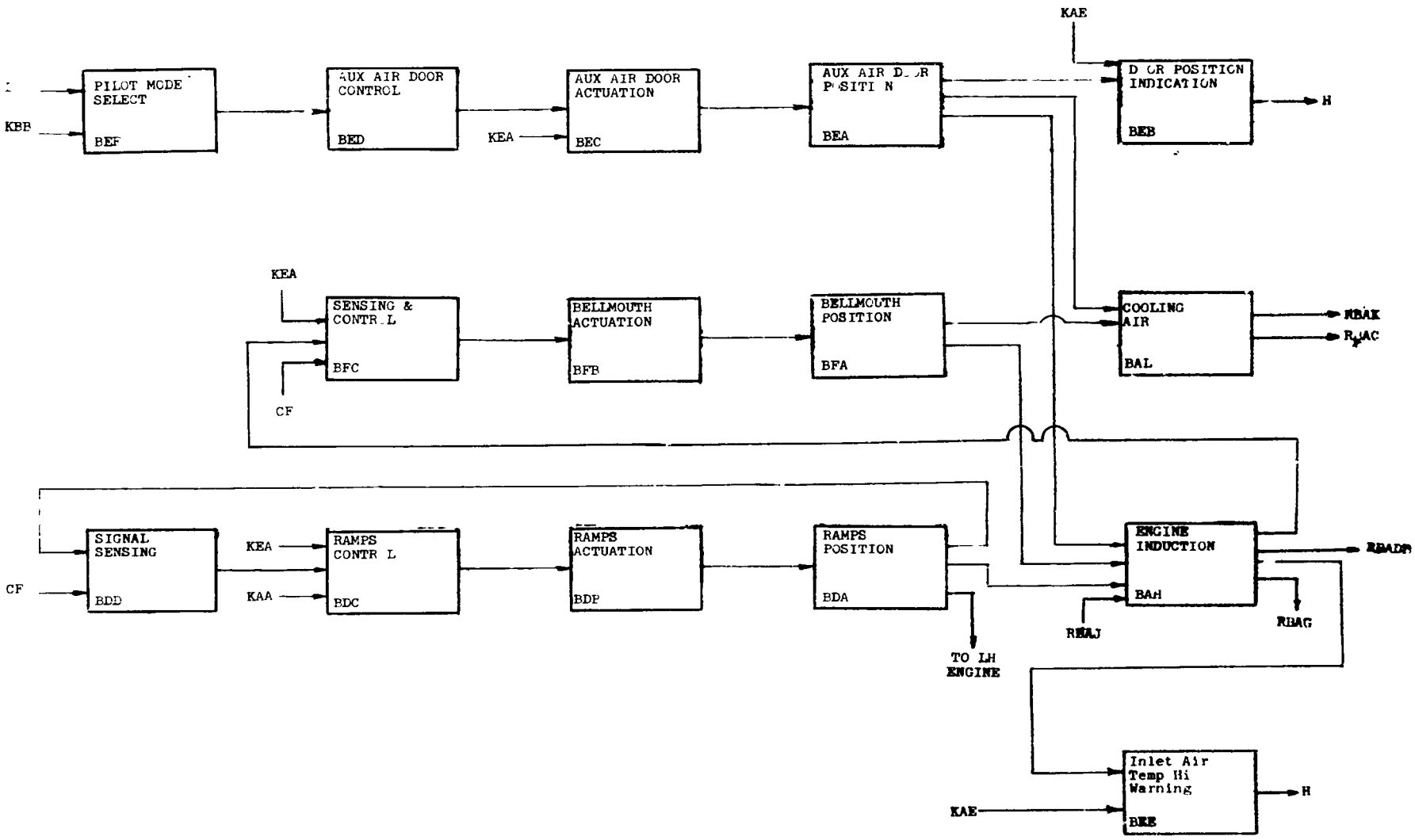

Aircraft:	**F-4J**
Title:	**Functional Diagram**
	AIR IND TION
Document:	**rev. date**
Date:	

Revised [illegible] ARINC

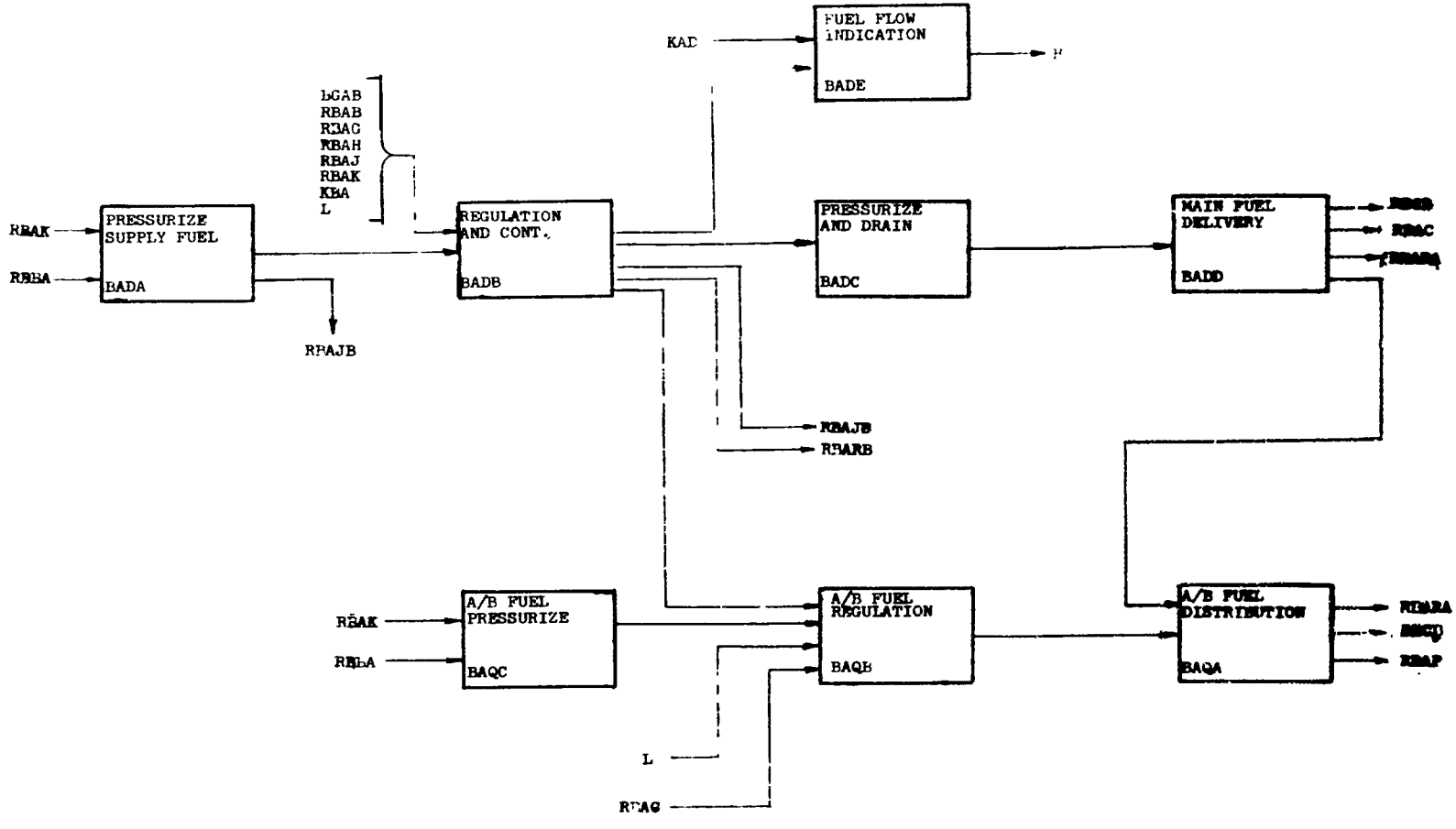

Aircraft: F-4J

Title: Functional Diagram

ENGINE & AFTERBURNER FUEL

Document: NAVAIR [illegible]

rev. date [illegible]

Date: [illegible]

Revised 20 May 1969 ARINC

Section F-1.3

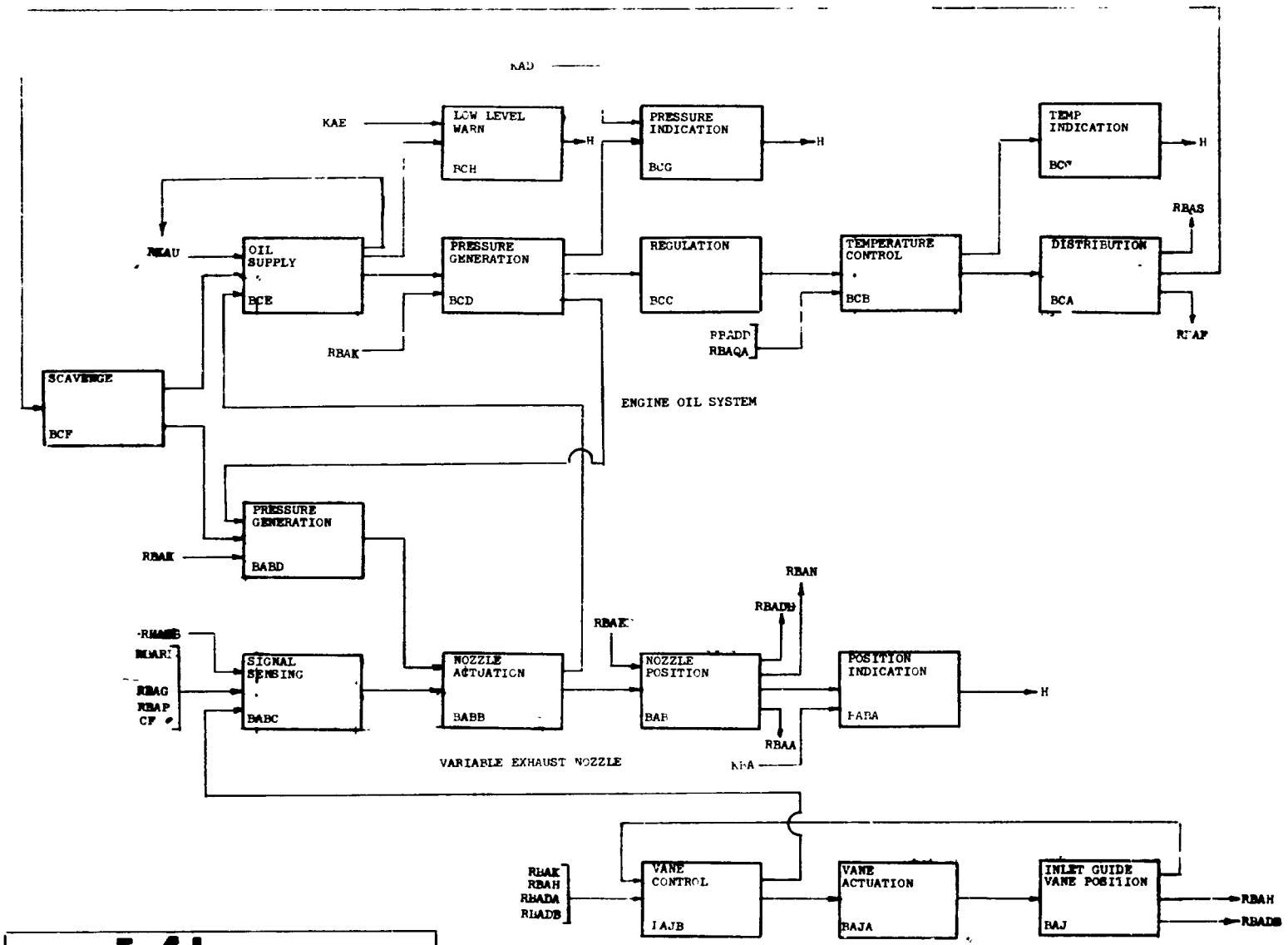

Aircraft: F-4J

Title: Functional Diagram
ENGINE II - VARIABLE EXHAUST - INLET GUIDE VANES

Document: **rev. date**

Date:

Revised 20 May, 1969 ARINC

Section B-1.2

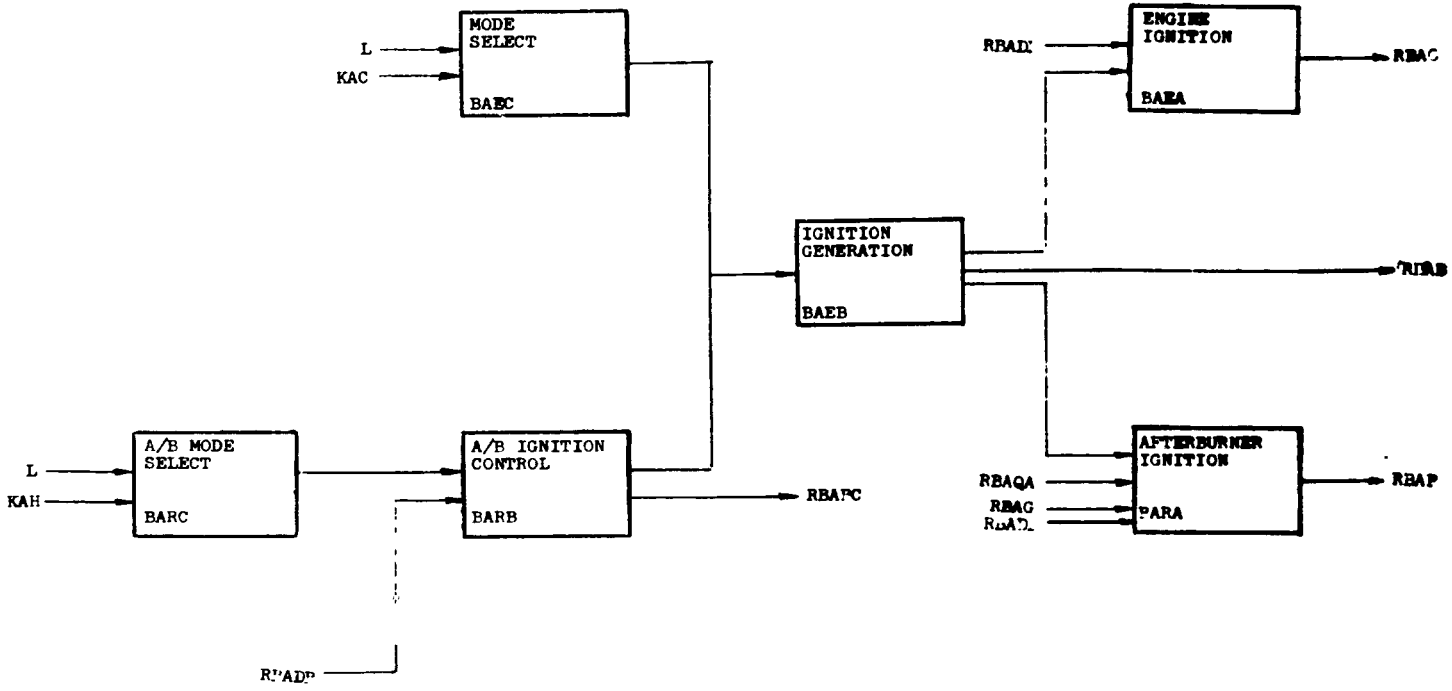

Aircraft: F-4J	
Title: Functional Diagram	
Document:	**rev. date**
Date:	

Revised May 1 ARINC

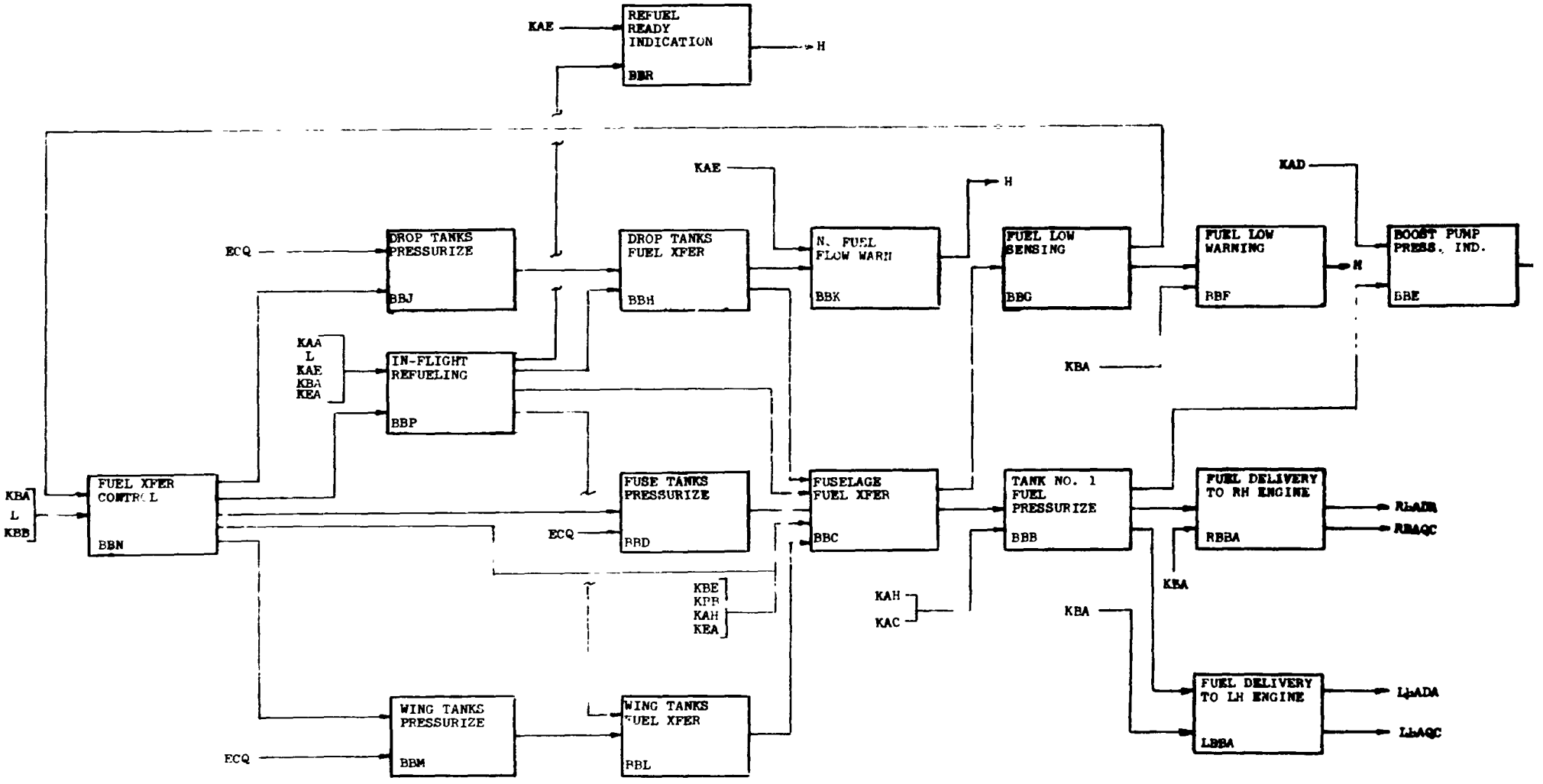

Aircraft: F-4J	
Title: Functional Diagram	
Document:	**rev. date**
Date:	

Revised Mar 1970 ARINC

	TITLE	WUC	ALPHA	INPUT	DEP FUNC	CD	AL	SENSITIVITY FC	FN	M	1	2	3	4	5	6	7	8	9	0
	PROPULSION		0																	0
			0																	0
	BASIC ENGINE RIGHT		RBA																	0
			RBA																	0
	ENGINE AIR INDUCTION	3	RBAH																	
		3	RBAH																	
		3	RBAH																	
		3	RBAH																	
	FRONT FRAME INLET CASE	323A1100	RBAHA																	
	COMPRESSION	3	RBAG																	
		3	RBAG																	
		3	RBAG																	
		3	RBAG																	
		3	RBAG																	
10	BEARING NO 1	323A1110	RBAGA																	
17	AIR/OIL CARBON SEAL	323A1120	RBAGB																	
18	COMPRESSOR HOUSING	323A1200	RBAGC																	
19	COMPRESSOR STATOR VANE	323A1210	RBAGD																	
20	STATOR VANE SHROUD	323A1211	RBAGE																	
21	COMPRESSOR ROTOR ASSEMBLY	323A1300	RBAGF																	
22	COMPRESSOR REAR FRAME	323A1400	RBAGG																	
23	BEARING NO 2	323A1410	RBAGH																	
24	CARBON OIL SEAL	323A1420	RBAGJ																	
25	CUPPORT	323A1440	RBAGK																	
26	SHIELD	323A1450	RBAGL																	
	ENGINE COMBUSTION	3	RBAC	RBAG	RBAP															
		3	RBAC	RBAL	RBAF															
29		3	RBAC	RBADD																
		3	RBAC	RBALA																
31	OUTER CASE	323A21	RBACA																	
32	COMBUSTION CHAMBER	323A2200	RBACB																	

	TITLE	WUC	ALPHA	INPUT	DEP FUNC	CD	AL	SENSITIVITY FC	FN	M	1	2	3	4	5	6	7	8	9	0
33	INNER COMBUSTION CASING	323A23	RBACC																	
34	TRANSITION DUCT	323A24	RBACD																	
	COMPRESSOR ROTATION		RBAB	RBAF	RBAK															
	TURBINE ROTATION	3	RBAF	RBAC	RBAA															
			RBAB	RBCA	RBAG															
	TURBINE ROTATION		RBAF	RBCA	RBAB															
36	FIRST STAGE TURBINE	323A31	RBAFA																	
37	SECOND STAGE TURBINE	323A32	RBAFB																	
38	THIRD STAGE TURBINE	323A33	RBAFC																	
39	TURBINE ROTOR	323A3400	RBAFD																	
40	INNER AIR BAFFLE	323A3420	RBAFE																	
41	INTERSTAGE SEAL	323A3440	RBAFF																	
42	TURBINE SHAFT	323A3450	RBAFG																	
43	TURBINE CASING	323A3500	RBAFH																	
44	TURBINE ROTOR SHROUD	323A3510	RBAFJ																	
45	IMPINGEMENT MANIFOLD	323A3520	RBAFK																	
46	TURBINE FRAME	323A3600	RBAFL																	
47	VANE	323A3620	RBAFM																	
48	INNER/OUTER CONE	323A3630	RBAFN																	
49	SUPPORT	323A3640	RBAFP																	
50	COOLING BAFFLE	323A3650	RBAFQ																	
51	FRAME CONE SUPPORT	323A3660	RBAFR																	
52	ROTOR SPILL BAFFLE	323A3670	RBAFS																	
53	BEARING NO 3	323A3680	RBAFT																	
54	CARBON OIL SEAL	323A3690	RBAFU																	
	MAIN ENGINE THRUST	3	RBAA	RBAB	RBA															
	MAIN ENGINE THRUST		RBAA	RBAF																
56	INNER REAR CONE	323A41	RBAAA																	
57	FORWARD EXHAUST DUCT	323A4300	RBAAB																	
58	LINER	323A4310	RBAAC																	
59	CONE	323A4341	RBAAD																	
60	REAR EXHAUST DUCT	323A4400	RBAAE																	
61	LINER	323A4310	RBAAP																	
62	OUTER SHELL	323A4420	RBAAG																	
	ACCESSORY DRIVE	3	RBAK	RBAL	RBADD															
		3	RBAK	RBAS	RBCD															
		3	RBAK		RBADA															
		3	RBAK		KDB															
		3	RBAK		KEB															
		3	RBAK		RKAU															
		3	RBAK		RHAAA															
	ACCESSORY DRIVE		RBAK		RBAJB															
			RBAK		RBADB															
			RBAK		RBABC															
71	FRONT GEARBOX	323A51	RBAKA																	
72	TRANSFER GEARBOX	323A5200	RBAKB																	
73	RADIAL DRIVE SHAFT	323A5210	RBAKC																	
74	DRIVE SHAFT HOUSING	323A5220	RBAKD																	

	TITLE	WUC	ALPHA	INPUT	DEP FUNC	CD FC	AL FN	SENSITIVITY W 123456789
75	REAR GEARBOX	323A03	RBAHE				A	
76	BEARING HOUSING	323A04	RBAHF				A	
	A/B COMBUSTION	3	RBAP	RBAAA	RBABC			AAAAAAAAA
		3	RBAP	RBARA	RBAN			AAAAAAAAA
	A/B COMBUSTION		RBAP	RBAC				
	REAR EXHAUST DUCT	323A40	RBAAE				A	
	LINER	323A31	RBAAF				A	
	OUTER SHELL	323A40	RBAAG				A	
	AFTERBURNER THRUST	3	RBAN	RBAB	RBA			020000000
	A/B THRUST		RBAN	RBAP				
	ENGINE BLEED AIR	3	BAR	RBAG	CDA			AAAAAAAAA
		3	BAR	LBAG	EBAD			AAAAAAAAA
		3	BAR		F			AAAAAAAAA
		3	BAR		EAAJ			AAAAAAAAA
86	•INLET GUIDE VANE POSITION	3	RBAJ	RBAJA	RBADB			011111110
	INLET GUIDE VANE POSITION		RBAJ		RBAJB			AAAAAAAAA
		3	RBAJ		RBAH			000000000
	INLET GUIDE VANE ACTUATION	3	RBAJA	RBAJB	RBAJ			AAAAAAAAA
89	GUIDE VANE SUPPORT	323A11	RBAJAA				A	
90	GUIDE VANE	323A11	RBAJAB				A	
91	GUIDE VANE BEARING	323A11	RBAJAC				A	
92	HALF RING ASSEMBLY LH	323A11	RBAJAD				S	
93	LEVER ARM	323A11	RBAJAE				A	
94	BELLCRANK SUPPORT	323A12	RBAJAF				A	
95	MAIN CRANK	323A12	RBAJAG				A	
96	MASTER ROD	323A12	RBAJAH				A	
97	LH ACTAUTOR	323A11	RBAJAJ				S	
98	RH ACTUATOR	323A11	RBAJAK				S	
99	HALF RING ASSEMBLY RH	323A11	RBAJAL				S	
	VANE CONTROL	3	RBAJB	RBAJ	RBAJA			AAAAAAAAA
41		3	RBAJB	RBAH	RBABC			AAAAAAAAA
42		3	RBAJB	RBAK				
	VANE CONTROL		RBAJB	RBADB				
			RBAJB	RBADA				
44	FEEDBACK SIGNAL SHAFT	323A11	RBAJBA				A	
	ENGINE COOLING AIR		RBAL	RBEA	RBAC			AAAAAAAAA
			RBAL	RBFA	RBAK			AAAAAAAAA
	•AUX AIR DOOR POSITION	3	RBEA	RBEC	RBAH			921111129
		3	RBEA		RBEB			AAAAAAAAA
		3	RBEA		RBAL			AAAAAAAAA
46	AUXILLIARY AIR DOOR	311331	RBEAA				A	
	AUX AIR DOOR ACTATION	3	RBEC	RBED	RBEA			AAAAAAAAA
49		3	RBEC	KEA				
88	AUX AIR DOOR ACTUATOR	311332	RBECA				A	
	AUX AIR DOOR CONTROL	3	RBED	RBEF	RBEC			AAAAAAAAA
	AUX AIR DOOR SELECTOR VALVE	311334	RBEDA				A	
	PILOT MODE SELECT	3	RBEF	L	RBED			AAAAAAAAA
84		3	RBEF	KBB				

	TITLE	WUC	ALPHA	INPUT	DEP FUNC	CD FC	AL FN	SENSITIVITY W 123456789
89	AUX AIR DOOR RELAY	31133•	RBEFA				A	
86	LANDING GEAR HANDLE SWITCH	31311	DADB		RBEF		A	
87	5 AMP CIRCUIT BREAKER	31133•	DADA		RREF		A	
	DOOR POSITION INDICATION	3	RBEB	RBEA	H			500000009
49		3	RBEB	KAE				
	WARNING LIGHT	311333	RBEBA				A	
	AUX LANDING GEAR RELAY	31311•	DADC		RREB		A	
	AUX AIR DOOR POSITION SW	31133•	RBEBB				A	
C3	•BELLMOUTH POSITION	3	RBFA	RBFB	RBAL			041111100
		3	RBFA		RRAH			131111131
C5	BELLMOUTH RING	329A11	RBFAA				A	
	BELLMOUTH ACTUATION	3	RBFB	RBFC	RBFA			AAAAAAAAA
C7	ACTUATOR	329A12	RBFBA				A	
C8	CABLE	329A13	RBFBB				A	
C9	PULLEY	329A14	RBFBC				A	
D3	SECTOR	329A15	RBFBD				A	
D1	IDLER,ROD, AND BELLCRANK	329A1F	RBFBE				A	
	SENSING AND CONTROL	3	RBFC	CF	RRFB			AAAAAAAAA
D3		3	RBFC	KEA				
	SENSING AND CONTROL		RBFC	RBAH				
D4	CONTROLLER	329A1G	RBFCA				A	
D5	PITOT TUBE	329A1H	RBFCD				A	
D6	STATIC SENSOR	329A1•	RBFCE				A	
	•VARIABLE RAMPS POSITION	3	BDA	BDB	RRAI	F		011111110
	VARIABLE RAMPS POSITION	3	BDA	BDB	LBAH			011111110
		3	BDA		BDD			AAAAAAAAA
D9	FORWARD RAMP	311311	BDAA				A	
E0	AFT RAMP	311312	BDAB				A	
E1	FIXED RAMP	311313	BDAC				A	
	VARIABLE RAMPS ACTUATION	3	BDB	BDC	BDA			AAAAA*AAA
E3	RAMP MECHANISM ROD	311315	BDBA				A	
E4	RAMP ACTUATOR	311314	BDBB				A	
E5	RAMP HINGE	311316	BDBC				.	
E6	RAMP SWIVEL	311317	BDBD				A	
E7	BELLCRANK	31131F	BDBE				A	
	RAMPS CONTROL	3	BDC	KEA	BDB			AAAAAAAAA
E9		3	BDC	BDD				
E9		3	BDC	KAA				
F0	SERVO VALVE	311316	BDCA				A	
F1	RAMP CONTROL AMPLIFIER	311316	BDCB				A	
	SIGNAL SENSING	3	BDD	BDA	BDC			AAAAAAAAA
		3	BDD	CF				
F4	FEEDBACK POTENTIOMETER	311310	BDDA				A	
	INLET AIR TEMP HIGH WARNING	3	RBEE	KAE	H			AAAAAAAAA
		3	RBEE	RBAH				
	TEMP SENSOR	31131•	RBEEA				A	
	5 AMP FUSE	31131•	RBEEB				A	
	WARNING LIGHT	31131•	RBEEC				A	

	TITLE	NUC	ALPHA	INPUT	DEP FUNC	CD FC	AL FN	M	SENSITIVITY 1234567890
S1	MAIN FUEL DELIVERY	3	RBA0D	RBA0C	RBAC				0A0000A30
		3	RBA0D		RBARA				AAAAAAAAA
	MAIN FUEL DELIVERY		RBA0D		RBCB				AAAAAAAAA
			RBA0D		RBA0A				5000005000
B3	PRIMARY FUEL NOZZLE	323A00	RBA0D0A				A		
B4	SECONDARY FUEL NOZZLE	323A40	RBA0D0B				A		
B5	FUEL TUBING	323A07	RBA0D0C				A		
	PRESSURIZE AND DRAIN	3	RBA0C	RBA0B	RBA0D				AAAAAAAAA
B7	PRESSURIZE AND DUMP VALVE	323A08	RBA0C0A				A		
	FUEL REGULATION AND CONTROL	3	RBA0D	RBAJ	RBAJB				AAAAAAAAA
		3	RBA0D	RBA0A	RBARB				AAAAAAAAA
	REGULATION AND CONTROL		RBA0D	RBA6	RBADE				
			RBA0D	RBAH	RBADC				
			RBA0D	RBAK	RBA0B				
			RBA0D	RBAB					
			RBA0D	BBAR					
			RBA0D	KRA					
			RBA0D	L					
M1	MAIN FUEL CONTROL	323A02	00RBA0BA				A		
M2	TORQUE BOOSTER CONTROL	323A03	RBA0B0				A		
M3	FUEL OIL COOLER	323A04	RBCB0				A		
	5 AMP FUSE	323A02	00RBA0BC				A		
	INLET TEMPERATURE SENSOR	323A02	10RBA0B0				A		
M6	THROTTLE LEVER	329311	RBGAAA				A		
M6	FUEL FLOW TRANSMITTER	351442	RBA0EA				A		
	FUEL FLOW INDICATION	3	RBA0E	RBA0B	H				AAAAAAAAA
J8		3	RBA0E	KAU					
	FUEL FLOW TRANSMITTER	351442	RBA0EA				A		
	FUEL FLOW INDICATOR	351441	RBA0EB				A		
	5 AMP FUSE	351440	RBA0EC				A		
	FUEL SUPPLY PRESSURIZE	3	RBA0A	RBAK	RBA0B				AAAAAAAAA
J4	MAIN FUEL PUMP	323A01	00RBA0AA				A		
			RBA0A	RBRA	RBAJB				
J5	BYPASS INDICATOR SWITCH	323A01	10RBA0AB				1		
	FUEL FILTER	323A01	0ORBA0AC				A		
	TEMPERATURE AMPLIFIER	323A03	RBA0CB				A		
	A/B FUEL DELIVERY	3	RBA0A	RBAJB	RRAP				AAAAAAAAA
	A/B FUEL DISTRIBUTION		RBA0A	RBA0D	RBCB				999999999
			RBA0A		RRARA				AAAAAAAAA
	A/B FUEL SPRAYBAR	323A74	RBA0AA				A		
	A/B FUEL MANIFOLD	323A75	RBA0AB				A		
	FUEL OIL COOLER	323A72	RBCBC				A		
	TUBING	323A77	RBA0AC				A		
	PRESSURIZING VALVE	323A73	RBA0AD				A		
	A/B FUEL REGULATION	3	RBA0B	RBAUR	RRA0A				AAAAAAAAA
		3	RBA0B	RBAUC					
		3	RBA0B	RBAG					
		3	RBA0B	L					

	TITLE	NUC	ALPHA	INPUT	DEP FUNC	CD FC	AL FN	M	SENSITIVITY 1234567890
	A/B FUEL CONTROL	323A78	RBA0RA					A	
	THROTTLE LEVER	329311	RBGAAA					A	
	A/B FUEL PRESSURIZE	3	RBA0C	RBAK	RRA0B				AAAAAAAAA
K9		3	LBA0C	RBBA					
	A/B FUEL PUMP	323A71	00RBA0CA					A	
	CHECK VALVE	323A71	10RBA0CB					A	
	FILTER	323A71	0ORBA0CC					A	
	PUMP VENT VALVE	323A71	20RBA0CD					A	
	FUEL INLET VALVE	323A71	30RBA0CE					A	
	ON/OFF VALVE	323A71	40RBA0CF					A	
L6	ENGINE IGNITION	3	RBAEA	RBA0D	RRAC	T			00AAAAA00
L7		3	RBAEA	RBAEB					
L8	IGNITER PLUG	323AA0	RBAEAA					A	
L9	HIGH TENSION LEAD	323AA9	RBAEAB					A	
	IGNITION GENERATION	3	RBAEB	RBAEC	RRAEA				AAAAAAAAA
		3	RBAEB	RBARR	RBARA				AAAAAAAAA
		3	RBAEB		HBAB				AAAAAAAAA
M2	IGNITION EXCITER UNIT	323AA1	RBAERA					A	
	MODE SELECT	3	RBAEC	L	RRAEB				AAAAAAAAA
M4		3	RBAEC	KAC					
M5	THROTTLE SWITCH	327AA0	RBAECA					A	
M6	5 AMP FUSE	323AA0	RBAECB					A	
	*AFTERBURNER IGNITION	3	RBARA	RBAEB	RBAP				AAAAAAAAA
M3		3	RBARA	RBAQA					
M9		3	RBARA	RBAG					
	A/B IGNITION		RBARA	RBADD					
N0	TORCH IGNITER	323A43	40RBARAA					A	
N1	IGNITER PLUG	323A43	4*RBARAB					A	
	AFTERBURNER IGNITION CONT	3	RBARB	RBARC	RBAEB				AAAAAAAAA
		3	RBARB	RBAUB	RBABC				AAAAAAAAA
N7	AFTERBURNER IGNITION SWITCH	323AA4	RBARBA					A	
N8	HYD XFER PUMP CONTROL RELAY	323AA*	RBARBB					A	
	AFTERBURNER MODE SELECT	3	RBARC	L	RBARB				AAAAAAAAA
P0		3	RBARC	KAH					
P1	THROTTLE LEVER	329311	RBGAAA					A	
P2	5 AMP FUSE	323AA*	RBARCA					A	
	EXAUST NOZZLE POSITION	3	RBAB	RBABB	RBABA				AAAAAAAAA
		3	RBAB	RBAEB	RBAM				999999999
		3	RBAB		RRAA				888888888
	NOZZLE POSITION		RBAB		RBADB				AAAAAAAAA
	NOZZLE POSITION INDICATION	3	RBABA	KBA	H				011111110
		3	RBABA	RBAB					
	5 AMP FUSE	351630	RBABAA					A	
	NOZZLE POSITION INDICATOR	351637	RBABAB					A	
	NOZZLE ACTUATION	3	RBABB	RBABC	RBAB				AAAAAAAAA
		3	RBABB	RBABD	RBCE				AAAAAAAAA
Q0	OUTER SHROUD	323A44	40RBABBA					B	
Q1	SUPPORT RING	323A44	70RBABBB					A	

	TITLE	WUC	ALPHA	INPUT	DEP FUNC	CD AL FC PN	SENSITIVITY M 123456789
02	SHROUD FLAP	323A447[illegible]	RBABBC				A
03	SHROUD FLAP SEAL	323A447[illegible]	RBABBD				2
04	NOZZLE FLAP	323A4468	RBABBE				A
05	NOZZLE FLAP SEAL	323A4481	RBABBF				5
06	NOZZLE FLAP HINGE	323A4468	RBABBG				A
	CAM LINK ACTUATOR	323A4468	RBABBH				A
08	ACTUATOR	323A4468	RBABBJ				4
09	ACTUATOR	323A4468	RBABBK				4
R0	ACTUATOR	323A4468	RBABBL				4
R1	ACTUATOR	323A4468	RBABBM				4
R2	ROD	323A4458	RBABBN				4
R3	ROD	323A4458	RBABBP				4
R4	ROD	323A4458	RBABBQ				4
R5	ROD	323A4458	RBABBR				4
R6	NOZZLE AREA CONTROL VALVE	323A46A	RBABBS				A
R7	FEEDBACK CABLE	323A4[illegible]	RBABBT				A
	PRESSURE GENERATION	3	RBABD	RBCD	HBARB		AAAAAAAAA
R9		3	RBABD	RBA[illegible]			
		3	RBABD	RBCF			
S0	NOZZLE PUMP	323A88	RBABDA				A
	SIGNAL SENSING	3	RBABC	RHABB	RBARH		AAAAAAAAA
		3	RBABC	RBAJR			
S2		3	RBABC	RBARR			
S2		3	RBABC	RBAG			
S2		3	RBABC	RBAP			
		3	RBABC	CF			
S3	CONTROL ALTERNATOR	323A92	RBABCA				A
S4	TEMPERATURE AMPLIFIER	323A93	RBABCB				A
	EXHAUST GAS THERMOCOUPLE	3511424	RBABCC				A
S6	BRANCHED CABLE	323A91	RBABCD				A
	*FUEL CONTROL SETTING	3	BGAR	BGAA	RGBA		000000050
		3	BGAR	KB1	RBADB		AAAAAAAAA
		3	BGAR	KBL	LBADB		AAAAAAAAA
S8		3	BGAR	BGBA			
S9	INTEGRATED TORQUE BOOSTER	329C15	BGARA				A
	POWER SELECTION	3	BGAA	L	RGAB		AAAAAAAAA
T1	THROTTLE LEVER	329311	BGAAA				A
	FRICTION LOCK	329312	BGAAB				5
T3	TELEFLEX UNIT	329310	BGAAC				A
T4	TELESCOPING UNIT	32931E	L3AAD				A
T5	ROD	329316	BGAAE				A
T6	*APCS ACTIVATION	3	BGBA	KBE	BGAB		000000010
T7		3	BGBA	BGAB			
T7		3	BGBA	BGBB			
T7		3	BGBA	KAA			
T8	CONTROL AMPLIFIER	329C14	BGBAA				A
	SIGNAL CONDITIONING	3	BGBB	BGBO	BGBA		AAAAAAAAA
		3	BGBB	KAA	RGBC		AAAAAAAAA

	TITLE	WUC	ALPHA	INPUT	DEP FUNC	CD AL FC PN	SENSITIVITY M 123456789
U0		3	BGBB	KBL			
U1	THROTTLE CONTROL COMPUTER	329C1*	BGBBA				A
	SIGNAL SENSING	3	BGBD	BGBF	BGBB		AAAAAAAAA
U3		3	BGBD	KBL			
	SIGNAL SENSING		BBBD	CF			
U4	ACCELEROMETER	329C1*	BGBDA				A
U5	ANGLE OF ATTACK TRANSMITTER	329C11	BGBDB				A
U6	STAB POSITION TRANSDUCER	329C11	BGBDC				A
	MODE SELECT	3	BGBE	L	RGBD		AAAAAAAAA
U8	APCS SELECT SWITCH	329C1*	BGBEA				A
U9	5 AMP CIRCUIT BREAKER	329C1*	BGBEB				A
V0	5 AMP CIRCUIT BREAKER	329C1*	BGBEC				A
V0	5 AMP CIRCUIT BREAKER	329C1*	BGBED				A
V0	5 AMP CIRCUIT BREAKER	329C1*	BGBEE				A
V0	5 AMP CIRCUIT BREAKER	329C1*	BGBEF				A
V1	AIR TEMP SWITCH	329C1A	BGBEG				A
V2	ENGINE SELECTOR SWITCH	329C1*	BGBEH				A
V3	EMERG SPEED BRAKE SWITCH	314624	CEFA				A
V4	SPEED BRAKE CONTROL SWITCH	314627	CEDA				A
V5	NLG DOWN LIMIT SWITCH	313143	DAABAA				A
V6	M MAIN GEAR SCISSOR SWITCH	313145	RDAAAA?				A
V7	SPEED BRAKE RETRACT RELAY	31462*	CEEA				A
V8	APCS DISENGAGE RELAY	329C1*	BGBEJ				A
V9	POWER INTERLOCK RELAY	329C1*	BGBEK				A
	APCS OFF INDICATION	3	BGBC	BGBB	M		000000080
W1		3	BGBC	KAE			
W2	WARNING LIGHT	329C17	BGBCA				A
W3	WARNING LIGHT RELAY	329C1*	BGBCB				A
	FUEL/HYDRAULIC RADIATOR	449128	KCDC				A
06	*FUEL DELIVERY TO RH ENGINE	4	RBBA	KBA	RBADA		045595530
		4	RBBA	BBB			
	FUEL DELIVERY TO ENGINES		RBBA		ARABC		AAAAAAAAA
	STRAINER/DRAIN VALVE	446136	RBBAA				A
	FUEL/HYDRAULIC RADIATOR	449128	KDDC				A
	MAINFOLD SHUTOFF VALVE	446136	RBBAB				A
	ENGINE FEED MANIFOLD	446137	RBBAC				A
	TANK NO 1 FUEL PRESSURIZE	4	BBB	BBC	RBBA		011123440
	TANK NO 1 FUEL PRESSURIZE	4	BBB	KAH	LBBA		011123440
13		4	BBB	KAC	RBE		AAAAAAAAA
	LH BOOST PUMP ASSEMBLY	44613100	BBBA				5
	RH BOOST PUMP ASSEMBLY	44613100	BBBB				5
17	RH PUMP CHECK VALVE	446133	RBBBC				1
18	BOOST PUMP BYPASS CHECK V	44613*	BBBD				A
19	DEFUELING SHUTOFF VALVE	446122	BBBE				A
20	TANK NO 1 DRAIN VALVE	44613*	BBBF				A
21	MANIFOLD DRAIN VALVE	446135	BP9G				A
	FUSELAGE FUEL TRANSFER	4	BBC	KBE	BBB		AAAAAAAAA
		4	BBC	BAL	RBC		AAAAAAAAA

	TITLE	MUC	ALPHA	INPUT	DEP FUNC	CD AL SENSITIVITY FC FN 0 1234567890
24		4	BBC	KAH		
25		4	BBC	KEA		
26		4	BBC	BBD		
27		4	BBC	BBB		
28		4	BBC	BBH		
29		4	BBC	BBN		
29		4	BBC	BBP		
30	TANK NO 1	446101	BBBA			A
31	TANK NO 2	446102	BBBB			A
32	TANK NO 3	446103	BBBC			A
33	TANK NO 4	446104	BBBD			A
34	TANK NO 5	446105	BBBE			A
35	TANK NO 6	446106	BBBF			A
36	TANK NO 7	446107	BBBG			A
37	INTERCONNECT CHECK VALVE	446149	BBCH			2
38	INTERCONNECT CHECK VALVE	446149	BBCJ			2
39	INTERCONNECT CHECK VALVE	446149	BBCK			2
40	TANK NO 4 HYD FUEL PUMP	446144	BBBL			2
41	TANK NO 4 ELECT FUEL PUMP	446140	BBCM			2
42	TANK NO 6 HYD FUEL PUMP	446145	BBCN			2
43	TANK NO 6 ELECT FUEL PUMP	446141	BBCP			2
44	NO 1 FUEL LEVEL CONTROL V	446148	BBCQ			2
45	NO 2 FUEL LEVEL CONTROL V	446142	BBCR			2
46	NO 7 FUEL XFER SHUTOFF V	446146	BBCS			1
47	NO 7 XFER MANUAL CONTROL V	446146	BBCT			1
	FUSE LAGE TANKS PRESSURIZE	4	BBD	BBN	BBC	222222222
49		4	BBD	ECU		
	HOT AIR CHECK VALVE	446116	BBDA			A
	AIRFLOW LIMITER	446118	BBDB			A
	PRESSURE REGULATOR	446111	BBDC			A
	FUSELAGE HOT AIR CHECK V	446116	BBDD			A
	PRESSURE/VACUUM VALVE	446113	BBDE			A
	DIVE VENT CHECK VALVE	446119	BBDF			A
	DIVE VENT CHECK VALVE	446119	BBDG			A
	DIVE VENT CHECK VALVE	446119	BBDH			A
	TANK NO 7 PILOT VALVE	446114	BBDJ			A
	TANK NO 7 PRESS REGULTOR	446114	BBDK			A
	CHECK VALVE	446114	BBDL			A
	CHECK VALVE	446114	BBDM			A
	CHECK VALVE	446114	BBDN			A
	CHECK VALVE	446114	BBDP			A
	CHECK VALVE	446114	BBDQ			A
	CHECK VALVE	446114	BBDR			A
	VENT MAST FIRE SCREEN	446114	BBDS			A
	FIRE SCREEN DRAIN	446114	BBDT			A
	DROP TANKS FUEL TRANSFER	4	BBH	BBJ	BBC	000000000
69		4	BBH	BBP	BBK	AAAAAAAAA
	CL TANK EMERG RELIEF VALVE	446214	BBHA			A

	TITLE	MUC	ALPHA	INPUT	DEP FUNC	CD AL SENSITIVITY FC FN 0 1234567890
	CL TANK FWD DRAIN VALVE	446214	BBHB			A
	CL TANK AFT DRAIN VALVE	446214	BBHC			A
	CL TANK FUEL DISCONNECT	446218	BBHD			A
	CL TANK FUEL CONTROL VALVE	446223	BBHE			A
	CL TANK PILOT VALVE	446221	BBHF			A
	CL TANK FUEL SHUTOFF VALVE	446225	BBHG			A
	REFUELING SHUTOFF VALVE	446121	BBHH			A
	R DROP TANK PILOT VALVE	446222	RBBHJ			A
	R DROP TANK FUEL CONTROL V	446224	RBBHK			A
	R DROP TANK FUEL DISCONNECT	446234	RBBHL			A
	R DROP TANK FUEL SHUTOFF V	446226	RBBHM			A
	CL DROP TANK	446231	BBHN			A
	R DROP TANK	446233	RBBHP			A
	DROP TANKS PRESSURIZE	4	BBJ	BBN	BBH	AAAAAAAAA
98		4	BBJ	ECU		
	CL TANK PRESSURE REGULATOR	446211	BBJA			A
	CL TANK PRESS/VENT VALVE	446212	BBJB			A
	CL TANK HOT AIR CHECK VALVE	446217	BBJC			A
	CL TANK AIR DISCONNECT	446214	BBJD			A
	CL TANK PRESS CHECK FITTING	44621C	BBJE			A
	R DROP TANK AIR DISCONNECT	446218	RBBJF			A
	R DROP TANK PRESS/VENT V	446210	RBBJG			A
	R DROP TANK PRESS REGULATOR	446219	RBBJH			A
	RH HOT AIR CHECK VALVE	446216	RBBJJ			A
	R PRESSURE CHECK FITTING	44621C	RBBJK			A
	NO FUEL FLOW WARNING	4	BBK	BBH	H	001100000
47		4	BBK	KAE		
	CL TANK FUEL FLOW SWITCH	446227	BBKA			A
	R FUEL FLOW SWITCH	446228	RBBKB			A
	5 AMP FUSE	446220	BBKC			A
	WARNING LIGHT	446430	BBKD			A
	WING TANKS FUEL TRANSFER	4	BBL	BBP	BBC	000011100
84		4	BBL	BBK		
	R WING I/B LEVEL SHUTOFF V	446178	RBBLA			A
	R WING O/B LEVEL SHUTOFF V	446178	RBBLB			A
	R WING TANK	446172	RBBLC			A
	WING TANKS PRESSURIZE	4	BBM	BBN	BBL	AAAAAAAAA
62		4	BBM	ECG		
	R WING TANK PRESS REGULATOR	446112	RBBMA			A
	R HOT AIR CHECK VALVE	446116	RBBMB			A
	R WING PRESS CHECK FITTING	446117	RBBMC			A
	R WING PRESS/VENT VALVE	446118	RBBMD			A
	EXTERNAL AIR PRESS CONNECT	446114	BBME			A
	R WING TANK DRAIN VALVE	446114	RBBMF			A
	FUEL TRANSFER CONTROL	4	BBN	L	BBJ	AAAAAAAAA
		4	BBN	KBA	BBP	AAAAAAAAA
		4	BBN	KBB	BBC	AAAAAAAAA
		4	BBN	BBC	BBD	AAAAAAAAA

	TITLE	WUC	ALPHA	INPUT	DEP FUNC	CD AL FC FN	DEMBIPIVITY M 1234567890
		4	BBN		BBM		AAAAAAAAA
	TANK NO 6 HYD PUMP PRESS SW	4446146	BBNA			A	
	TANK NO 4 HYD PUMP PRESS SW	4446146	BBNB			A	
	ELECT DPER PUMP PRESS SW	4446147	BBNC			A	
	TANK NO 5 LEVEL CONT VALVE	4446144	BBND			A	
	TANK NO 3 LEVEL CONT VALVE	4446143	BBNE			A	
	TANK NO 1 LEVEL CONT VALVE	4446148	BBNF			A	
F6	A ENGINE MASTER SWITCH	4234A0	BBNG			A	
	REFUEL PROBE SWITCH	446364	BBNH			A	
	WING DPER PRESS SWITCH	446410	BBNJ			A	
	DROP TANKS SELECTOR SWITCH	446417	BBNK			A	
	FUEL LEVEL CONT MASTER SW	446410	BBNL			A	
	REFUEL SELECTOR SWITCH	446417	BBNM			A	
	WING TANKS DPER SWITCH	446410	BBNN			A	
	LANDING GEAR HANDLE SWITCH	413A12	BABB			A	
	R MAIN GEAR DOWN LIMIT SW	413A48	BBAAAAAC			A	
	N MAIN GEAR SCISSORS SWITCH	413A48	BBAAAAAB			A	
	FUEL LOW LEVEL SWITCH	446431	BBNP			A	
	TRANS PRESS SEQUENCE RELAY	446110	BBNR			A	
	AUTO TRANSFER RELAY	446410	BBNS			A	
	WING/DROP TANKS PRESS RELAY	446110	BBNT			A	
	REFUEL RELAY	446120	BBNU			A	
	DROP TANK PRESS RELAY	446810	BBNV			A	
	DROP TANK SELECTOR RELAY	446810	BBNW			A	
	CL TANK PRESS RELAY	446110	BBNX			A	
	CL TANK SELECTOR RELAY	446810	BBNY			A	
	WING TANK STOP DPER RELAY	446190	BBNZ			A	
	5 AMP FUSE	446410	BBPA			A	
	5 AMP FUSE	446410	BBPB			A	
	5 AMP FUSE	446410	BBPC			A	
	5 AMP FUSE	446410	BBPD			A	
	5 AMP FUSE	446410	BBPE			A	
	5 AMP FUSE	446410	BBPF			A	
	FUEL LOW SENSING	4	BBR	BBC	BBF		AAAAAAAAA
		4	BBS		BBM		AAAAAAAAA
	TANK NO 5 LEVEL CHECK SW	446430	BBSF			A	
	FUEL LOW LEVEL SWITCH	446432	BBSG			A	
	FUEL LOW WARNING	4	BBF	BBG	M		0000001100
M6		4	BBF	MBA			
	WARNING LIGHT	446433	BBFA			A	
	5 AMP FUSE	446430	BBFB			A	
	FUEL LOW INDICATOR	431847	BBFC			A	
	BOOST PUMP PRESS INDICATION	4	BBE	MAD	M		0011111110
		4	BBE	BBG			
	R PRESSURE TRANSMITTER	451849	RBBEA			A	
	R PRESSURE INDICATOR	451846	RBBEB			A	
	5 AMP FUSE	446420	BBEC			A	
J7	IN-FLIGHT REFUELING	4	BBP	L	BBM	M	000AAAA7G

	TITLE	WUC	ALPHA	INPUT	DEP FUNC	CD AL FC FN	BFMBIPIVITY M 1234567890
		4	BBP	MAA	BBC		000AAAA7G
		4	BBP	MAL	BBL		000AAAA7G
M8		4	BBP	MBA			
M1		4	BBP	MEA			
	IN FLIGHT REFUELING		BBP	BBM	BBP		111111111
	R WING TANK LEVEL CONTROL V	446193	RBBPA			A	
	AIR REFUELING PROBE ASSY	446311 00	BBPB			A	
	PROBE CHECK VALVE	446311	BBPL			A	
	PROBE DOOR LATCH ACTUATOR	446313	BBPC			A	
	PROBE POWER ACTUATOR	446314	BBPD			A	
	PROBE CONTROL SWITCH	446311	BBPH			A	
	PROBE DOOR	44631C	BBPE			A	
	SEQUENCE VALVE	446311	BBPF			A	
	SELECTOR VALVE	446316	BBPG			A	
	PROBE UNLOCKED WARN LIGHT	446312	BBPH			A	
	5 AMP CIRCUIT BREAKER	446311	BBPJ			A	
	5 AMP FUSE	446311	BBPK			A	
	NIGHT REFUELING LIGHT	446220	BBPL			A	
	NO 1 FUEL LEVEL CONTROL V	446148	BBCB			A	
	NO 2 FUEL LEVEL CONTROL V	446142	BBCR			A	
	NO 9 FUEL LEVEL CONTROL V	446144	BBCN			A	
	NO 3 FUEL LEVEL CONTROL V	446143	BBNE			A	
	R DROP TANK FEUL SHUTOFF V	446826	RBBHH			A	
	CL DROP TANK SHUTOFF VALVE	446823	BBHG			A	
	REFUELING SHUTOFF VALVE	446821	BBHH			A	
	R DROP TANK CONTROL VALVE	446824	RBBHK			A	
	CL DROP TANK CONTROL VALVE	446823	BBHE			A	
	REFUEL READY INDICATION	4	BBR	BBP	M	M	000111110
M6		4	BBR	MAL			
	REFUEL READY LIGHT	446311	BBRA			A	
	5 AMP FUSE	446311	BBRB			A	
	SWITCH	446311	BBRC			A	
	*ENGINE OIL DISTRIBUTION	-	RBCA	RBCB	RBCF		0A3999020
	DISTRIBUTION		FBCA		RBAB		AAAAAAAAA
			RBCA		RBAF		AAAAAAAAA
02	OIL NOZZLES	-23A071	RBCAA			A	
03	OIL TUBING	-23A070	RBCAB			A	
	OIL SCAVENGE	-	A VCF	RBCA	RBCE		AAAAAAAAA
	SCAVANGE		RBCF		RBABO		333333333
06	NO 1 SCAVENGE PUMP	-23A02	RBCFA			A	
07	NO 2 SCAVENGE PUMP	-23A03	RBCFB			A	
08	NO 3 SCAVENGE PUMP	-23A04	RBCFC			A	
09	CBD FILTER	-43827	RBCFD			A	
10	VARIABLE NOZZLE FILTER	-23A00	RBCFE			2	
11	VARIABLE NOZZLE FILTER	-23A00	RBCFF			2	
12	CHECK VALVE	-23A00	RBCFG			A	
13	SCAVENGE OIL FILTER	-23A00	RBCFH			2	
	OIL SUPPLY	-	RBCE	RBABB	RBCH		AAAAAAAAA

	TITLE	WUC	ALPHA	INPUT	DEP FUNC	CD AL FC PN	SENSITIVITY M 1234567890
		-	RDCE	RDCF	RDCD		AAAAAAAAA
		-	RDCE	RKAU	RKAU		AAAAAAAAA
17	OIL TANK	-23A000	RDCEA				
18	PRESSURIZE/VACUUM VALVE	-23A004	RDCEB			A	
19	CHECK VALVE	-23A00+	RDCEC			A	
	LOW LEVEL WARNING	-	RDCH	RDCA	M	A	0202022220
21		-	RDCH	KAL			
	OIL LEVEL AMPLIFIER	-23A0+	RDCHA			A	
	LOW LEVEL WARNING LIGHT	-23A0+	RDCHB			A	
	OIL LEVEL SENSOR	-23A0+	RDCHC			A	
	5 AMP FUSE	-23A0+	RDCHD			A	
	PRESSURE GENERATION	-	RDCD				
		-	RDCD	RDCE	RDCB		AAAAAAAAA
		-	RDCD	RDAK	RDADD		0404044430
		-	RDCD		RDCC		AAAAAAAAA
29	MAIN OIL PUMP	-23A01	RDCDA			A	
	OIL PRESSURE INDICATION	-	RDCE	RDCU	M		0000000000
31		-	RDCE	KAU			
	5 AMP FUSE	-23A0+	RDCEA			A	
	PRESSURE TRANSMITTER	-91434	RDCEB			A	
	PRESSURE INDICATOR	-91433	RDCEC			A	
	PRESSURE REGULATION	-	RDCC	RDCU	RDCB		AAAAAAAAA
36	RELIEF VALVE	-23A0+	RDCCA			A	
	TEMPERATURE CONTROL	-	RDCD	RDADA	RDCA		AAAAAAAAA
		-	RDCD	RDADD	RDCJ		0333333330
38		-	RDCD	RDCC			
39	AIR OIL COOLER	-23A0+	RDCDA			3	
40	MAIN FUEL OIL COOLER	-23A04	RDCDB			A	
41	ADD FUEL OIL COOLER	-23A72	RDCDC			1	
42	TEMPERATURE REGULATOR	-23A0+	RDCDD			A	
	OIL TEMPERATURE INDICATION	-	RDCJ	RDCB	M		0333333330
	THERMOCOUPLE SENSOR	-91434	RDCJA			A	
	TEMPERATURE INDICATOR	-91433	RDCJB			A	
	BASIC ENGINE LOFT		LBA	LBAA	M		0999999430
			LBA	LBAN			
	ENGINE AIR INDUCTION	3	LBAH	LBA	LBFC		AAAAAAAAA
		3	LBAH	LBDA	LBAB		AAAAAAAAA
		3	LBAH	LBFA	LBADD		AAAAAAAAA
		3	LBAH	LBEA	LAEE		AAAAAAAAA
	FRONT FRAME INLET CASE	323411	00LBAHA			A	
	COMPRESSION	3	LBAG	LBAA	LAADB		AAAAAAAAA
		3	LBAG	LBAH	LAAM		AAAAAAAAA
		3	LBAG		LBAC		AAAAAAAAA
		3	LBAG		LBABC		AAAAAAAAA
		3	LBAG		LBABA		AAAAAAAAA
	BEARING NO 1	323411	1BLBAGA			A	
	AIR/OIL CARBON SEAL	323411	2BLBAGB			5	
	COMPRESSOR HOUSING	323412	00LBAGC			A	
	COMPRESSOR STATOR VANE	323412	1BLBAGD			7	

	TITLE	WUC	ALPHA	INPUT	DEP FUNC	CD AL FC PN	SENSITIVITY M 1234567890
	STATOR VANE SHROUD	323612	11LBAGE			A	
	COMPRESSOR ROTOR ASSEMBLY	323613	00LBAGF			A	
	COMPRESSOR REAR FRAME	323614	00LBAGG			A	
	BEARING NO 2	323614	1BLBAGH			A	
	CARBON OIL SEAL	323614	2BLBAGJ			5	
	SUPPORT	323614	4BLBAGK			A	
	SHIELD	323614	9BLBAGL			A	
	ENGINE COMBUSTION	3	LBAC	LBAC	LBAP		AAAAAAAAA
		3	LBAC	LBAL	LBAF		AAAAAAAAA
		3	LBAC	LBADD			
		3	LBAC	LBAEA			
	OUTER CASE	323621	LBACA			A	
	COMBUSTION CHAMBER	323622	00LBACB			A	
	INNER COMBUSTION CASING	323623	LBACC			A	
	TRANSITION DUCT	323624	LBACD			A	
	COMPRESSOR ROTATION		LBAB	LBAF	LBAH		AAAAAAAAA
			LBAB	LBCA	LBAG		AAAAAAAAA
	TURBINE ROTATION	3	LBAF	LBAC	LBAA		AAAAAAAAA
	TURBINE ROTATION		LBAF	LBCA	LBAB		AAAAAAAAA
36	FIRST STAGE TURBINE	323631	LBAFA			A	
37	SECOND STAGE TURBINE	323632	LBAFB			A	
38	THIRD STAGE TURBINE	323633	LBAFC			A	
39	TURBINE ROTOR	323634	00LBAFD			A	
40	INNER AIR BAFFLE	323634	2BLBAFE			A	
41	INTERSTAGE SEAL	323634	4BLBAFF			5	
42	TURBINE SHAFT	323634	9BLBAFG			A	
43	TURBINE CASING	323635	00LBAFH			A	
44	TURBINE ROTOR SHROUD	323635	1BLBAFJ			A	
45	IMPINGEMENT MANIFOLD	323635	8BLBAFK			A	
46	TURBINE FRAME	323636	00LBAFL			A	
47	VANE	323636	2BLBAFM			A	
48	INNER/OUTER CONE	323636	3BLBAFN			A	
49	SUPPORT	323636	4BLBAFP			A	
50	COOLING BAFFLE	323636	9BLBAFQ			6	
51	FRAME CONE SUPPORT	323636	6BLBAFR			A	
52	ROTOR SPILL BAFFLE	323636	7BLBAFS			7	
53	BEARING NO 3	323636	8BLBAFT			A	
54	CARBON OIL SEAL	323636	9BLBAFU			5	
	MAIN ENGINE THRUST	3	LBAA	LBAB	LRA		AAAAAAAAA
	MAIN ENGINE THRUST		LBAA	LBAF			
56	INNER REAR CONE	323641	LBAAA			A	
57	FORWARD EXHAUST DUCT	323643	00LBAAB			A	
58	LINER	323643	1BLBAAC			A	
59	CONE	323643	4BLBAAD			A	
60	REAR EXHAUST DUCT	323644	00LBAAE			A	
61	LINER	323643	1BLBAAF			A	
62	OUTER SHELL	323644	2BLBAAG			A	
	ACCESSORY DRIVE	3	LBAR	LBAL	LRABD		AAAAAAAAA

	TITLE	WUC	ALPHA	INPUT	DEP FUNC	CD AL SENSITIVITY PC FN M 1234567890
		3	LBAK	LBAS	LBCD	AAAAAAAAA
		3	LBAK		WCD	AAAAAAAAA
		3	LBAK		WEB	AAAAAAAAA
		3	LBAK		LKAU	AAAAAAAAA
		3	LBAK		LWAAA	AAAAAAAAA
		3	LBAK		LRADA	AAAAAAAAA
	ACCESSORY DRIVE		LBAK		LBAJB	AAAAAAAAA
			LBAK		LBADB	AAAAAAAAA
			LBAK		LRABC	AAAAAAAAA
71	FRONT GEARBOX	323491	LBAKA			A
72	TRANSFER GEARBOX	32349200LBAKB				A
73	RADIAL DRIVE SHAFT	32349210LBAKC				A
74	DRIVE SHAFT HOUSING	32349220LBAKD				A
75	REAR GEARBOX	323493	LBAKE			A
76	BEARING HOUSING	323494	LBAKF			A
	A/B COMBUSTION	3	LBAP	LBAUA	LRABC	AAAAAAAAA
		3	LBAP	LBAWA	LRAN	AAAAAAAAA
	A/B COMBUSTION		LBAP	LBAC		
	REAR EXHAUST DUCT	32344400LBAAE				A
	LINER	32344310LBAAF				
	OUTER SHELL	32344420LBAAG				A
	AFTERBURNER THRUST	3	LBAN	LBAB	LRA	020000000
	A/B THRUST		LBAN	LBAP		
	INLET GUIDE VANE POSITION	3	LBAJ	LBAJA	LRADB	0a1111110
		3	LBAJ		LRAN	000000000
	INLET GUIDE VANE POSITION		LBAJ		LRAJB	AAAAAAAAA
	INLET GUIDE VANE ACTUATION	3	LBAJA	LBAJB	LRAJ	AAAAAAAAA
89	GUIDE VANE SUPPORT	32341130LBAJAA				A
90	GUIDE VANE	32341140LBAJAB				A
91	GUIDE VANE BEARING	32341150LBAJAC				A
92	HALF RING ASSEMBLY LH	32341160LBAJAD				A
93	LEVER ARM	32341161LBAJAE				A
94	BELLCRANK SUPPORT	32341220LBAJAF				A
95	MAIN CRANK	32341230LBAJAG				A
96	MASTER ROD	32341240LBAJAH				A
97	LH ACTUATOR	32341150LBAJAJ				A
98	RH ACTUATOR	32341160LBAJAK				A
99	HALF RING ASSEMBLY RH	32341161LBAJAL				A
	VANE CONTROL	3	LBAJB	LBAJ	LBAJA	AAAAAAAAA
		3	LBAJB	LBAH	LBABC	AAAAAAAAA
		3	LBAJB	LBAK		
	VANE CONTROL		LBAJB	LBADA		
			LBAJB	LBADA		
A4	FEEDBACK SIGNAL SHAFT	32341160LBAJAA				A
	ENGINE COOLING AIR		LBAL	LBEA	LRAC	AAAAAAAAA
			LBAL	LBFA	LRAH	AAAAAAAAA
	AUX AIR DOOR POSITION	3	LBEA	LBEC	LBAH	>21111129
		3	LBEA		LBEA	AAAAAAAAA

	TITLE	WUC	ALPHA	INPUT	DEP FUNC	CD AL SENSITIVITY PC FN M 1234567890
		3	LBEA		LRAL	AAAAAAAAA
A8	AUXILLIARY AIR DOOR	311331	LBEAA			A
	AUX AIR DOOR ACTATION	3	LBEC	LBEL	LBEA	AAAAAAAAA
		3	LBEC	KEA		
B8	AUX AIR DOOR ACTUATOR	311332	LBECA			A
	AUX AIR DOOR CONTROL	3	LBED	LBEF	LREC	AAAAAAAAA
	AUX AIR DOOR SELECTOR VALVE	311334	LBEDA			A
	PILOT MODE SELECT	3	LBEF	L	LRED	AAAAAAAAA
		3	LBEF	KRB		
B5	AUX AIR DOOR RELAY	31133•	LBEFA			A
	LANDING GEAR HANDLE SWITCH	313112	DADR		LBEF	A
	5 AMP CIRCUIT BREAKER	31133•	DADA		LBEF	A
	DOOR POSITION INDICATION	3	LBEB	LBEA	W	>00000009
		3	LBEB	KAE		
	WARNING LIGHT	311333	LBEBA			A
	AUX LANDING GEAR RELAY	31131•	DADC		LBEB	A
	AUX AIR DOOR POSITION SW	31133•	LBEBB			A
	BELLMOUTH POSITION	3	LBFA	LBFB	LRAL	041111100
		3	LBFA		LRAH	131111151
C5	BELLMOUTH RING	329411	LBFAA			A
	BELLMOUTH ACTUATION	3	LBFB	LBFC	LRFA	AAAAAAAAA
C7	ACTUATOR	329412	LBFBA			A
C8	CABLE	329413	LBFBB			A
C9	PULLEY	329414	LBFBC			A
D3	SECTOR	329415	LBFBD			A
D1	IDLER,ROD, AND BELLCRANK	329416	LBFBF			A
	SENSING AND CONTROL	3	LBFC	CF	LRFB	AAAAAAAAA
		3	LBFC	KEA		
	SENSING AND CONTROL		LBFC	LBAH		
D4	CONTROLLER	329416	LBFCA			A
D5	PITOT TUBE	329416	LBFCD			A
D6	STATIC SENSOR	329416	LBFCE			A
	INLET AIR TEMP HIGH WARNING	3	LBEE	KAE	W	AAAAAAAAA
		3	LBEE	LBAH		
	TEMP SENSOR	31131•	LBEEA			A
	5 AMP FUSE	31131•	LBEEB			A
	WARNING LIGHT	31131•	LBEEC			A
	MAIN FUEL DELIVERY	3	LBADD	LBADC	LBAC	0a9999430
		3	LBADD		LBARA	AAAAAAAAA
	MAIN FUEL DELIVERY		LBADD		LBCB	AAAAAAAAA
			LBADD		LRAGA	999999999
G3	PRIMARY FUEL NOZZLE	323668	LBADDA			A
G4	SECONDARY FUEL NOZZLE	323669	LBADDB			A
G5	FUEL TUBING	323667	LBADDC			A
	PRESSURIZE AND DRAIN	3	LBADC	LBADA	LBADD	AAAAAAAAA
G7	PRESSURIZE AND DUMP VALVE	323665	LBADCA			A
	FUEL REGULATION AND CONTROL	3	LBADR	LBAJ	LRAJB	AAAAAAAAA
		3	LBADR	LBADA	LRARB	AAAAAAAAA

	TITLE	MUC	ALPHA	INPUT	DEP FUNC	CD AL SENSITIVITY FC FN W 1234567890
	REGULATION AND CONTROL		LBABB	LBAC	LBABE	
			LBABB	LBAH	LBABC	
			LBABB	LBAH	LBABB	
			LBABB	LBAB		
			LBABB	BBAB		
			LBABB	WBA		
			LBABB	L		
M6	MAIN FUEL CONTROL	323A4000	LBABBA			A
M7	TURBINE BOOSTER CONTROL	323A43	LBABBB			A
M8	FUEL OIL COOLER	323A44	LBABBB			A
	5 AMP FUSE	323A000+	LBABBC			A
	INLET TEMPERATURE SENSOR	323A0210	LBABBD			A
M9	THROTTLE LEVER	329311	LBBAAA			A
M9	FUEL FLOW TRANSMITTER	3914402	LBABEA			A
	FUEL FLOW INDICATION	3	LBABBF	LBABB	H	AAAAAAAAAA
		3	LBABBE	KAC		
	FUEL FLOW TRANSMITTER	3914402	LBABEA			A
	FUEL FLOW INDICATOR	3914401	LBABBB			A
	5 AMP FUSE	3914400	LBABBC			A
	FUEL SUPPLY PRESSURIZE	3	LBABBA	LBAK	LBABB	AAAAAAAAAA
		3	LBABBA	LBBA	LBAJB	
J6	MAIN FUEL PUMP	323A0110	LBABBA			A
J8	BYPASS INDICATOR SWITCH	323A0110	LBABBB			1
	FUEL FILTER	323A0120	LBABBC			A
	TEMPERATURE AMPLIFIER	323A03	LBABCB			A
	A/B FUEL DELIVERY	3	LBABBA	LBABB	LBAP	AAAAAAAAAA
	A/B FUEL DISTRIBUTION		LBABBA	LBABB	LBCB	9999999999
			LBABBA		LBARA	AAAAAAAAAA
	A/B FUEL SPRAYBAR	323A74	LBABBA			A
	A/B FUEL MANIFOLD	323A75	LBABBB			A
	FUEL OIL COOLER	323A72	LBFBC			A
	TUBING	323A77	LBABBC			A
	PRESSURIZING VALVE	323A73	LBABBD			A
	A/B FUEL REGULATION	3	LBABB	LBABB	LBABA	AAAAAAAAAA
		3	LBABB	LBABC		
		3	LBABB	LBAC		
		3	LBABB	L		
	A/B FUEL CONTROL	323A70	LBABBA			A
	THROTTLE LEVER	329311	LBCAAA			A
	A/B FUEL PRESSURIZE	3	LBABC	LBAK	LBABB	AAAAAAAAAA
		3	LBABC	LBBA		
	A/B FUEL PUMP	323A710	LBABCA			A
	CHECK VALVE	323A711	LBABCB			A
	FILTER	323A710	LBABCC			A
	PUMP VENT VALVE	323A712	LBABCD			A
	FUEL INLET VALVE	323A713	LBABCE			A
	ON/OFF VALVE	323A714	LBABCF			A
	ENGINE IGNITION	3	LBABA	LBABB	LBAC	BBAAAAABB

	TITLE	MUC	ALPHA	INPUT	DEP FUNC	CD AL SENSITIVITY FC FN W 1234567890
		3	LBABA	LBABB		
L8	IGNITER PLUG	323A60	LBABAA			A
L9	HIGH TENSION LEAD	323A69	LBABAB			A
	IGNITION GE[illegible]TION	3	LBABB	LBABC	LBABA	AAAAAAAAAA
		3	LBABB	LBABB	LBARA	AAAAAAAAAA
		3	LBABB		LBAB	AAAAAAAAAA
M2	IGNITION EXCITER UNIT	323A61	LBABBA			A
	MODE SELECT	3	LBABC	L	LBABB	AAAAAAAAAA
		3	LBABC	KAC		
M5	THROTTLE SWITCH	323A60	LBABCA			A
M6	5 AMP FUSE	323A60	LBABCB			A
	AFTERBURNER IGNITION	3	LBABA	LBABB	LBAP	AAAAAAAAAA
		3	LBABA	LBJAA		
		3	LBABA	LBAS		
	A/B IGNITION		LBABA	LBABB		
M8	TORCH IGNITER	323A634	LBABAA			A
M1	IGNITER PLUG	323A630	LBABAB			A
	AFTERBURNER IGNITION CONT	3	LBABB	LBABC	LBABB	AAAAAAAAAA
		3	LBABB	LBABB	LBABC	AAAAAAAAAA
M7	AFTERBURNER IGNITION SWITCH	323A64	LBABBA			A
M8	HYD MTR PUMP CONTROL RELAY	323A66	LBABBB			A
	AFTERBURNER MODE SELECT	3	LBABC	L	LBABB	AAAAAAAAAA
		3	LBABC	KAH		
P1	THROTTLE LEVER	329311	LBCAAA			A
P2	5 AMP FUSE	323A60	LBABCA			A
	EXHAUST NOZZLE POSITION	3	LBABB	LBABB	LBABA	AAAAAAAAAA
		3	LBABB	LBABB	LBAH	9999999999
		3	LBABB		LBAA	8888888888
	NOZZLE POSITION		LBABB		LBABB	AAAAAAAAAA
	NOZZLE POSITION INDICATION	3	LBABA	WBA	H	0111111110
		3	LBABA	LBABB		
	5 AMP FUSE	391630	LBABAA			A
	NOZZLE POSITION INDICATOR	391637	LBABAB			A
	NOZZLE ACTUATION	3	LBABB	LBABC	LBAB	AAAAAAAAAA
		3	LBABB	LBABB	LBCE	AAAAAAAAAA
80	OUTER SHROUD	3234440	LBABBA			B
81	SUPPORT RING	3234447	LBABBB			A
82	SHROUD FLAP	3234447	LBABBC			A
83	SHROUD FLAP SEAL	3234447	LBABBD			2
84	NOZZLE FLAP	3234440	LBABBE			A
85	NOZZLE FLAP SEAL	3234440	LBABBF			3
86	NOZZLE FLAP HINGE	3234440	LBABBG			A
	CAM LINK ACTUATOR	3234440	LBABBH			A
88	ACTUATOR	3234440	LBABBJ			4
89	ACTUATOR	3234440	LBABBK			4
8A	ACTUATOR	3234440	LBABBL			4
91	ACTUATOR	3234440	LBABBM			4
92	RHO	3234449	LBABBN			4

	TITLE	NUC	ALPHA	INPUT	DEP FUNC	CD FC	AL FN	SENSITIVITY W 123456789
R3	ROD	323A4490	LBABBP				4	
R4	ROD	323A4490	LBABBQ				4	
R5	ROD	323A4490	LBABBR				4	
R6	NOZZLE AREA CONTROL VALVE	323A64	LBABBS				A	
R7	FEEDBACK CABLE	323A4000	LBABBT				A	
	PRESSURE GENERATION	3	LBABD	LBCD	LBABB			AAAAAAAAA
		3	LBABD	LBAK				
		3	LBABD	LBCF				
80	NOZZLE PUMP	323A88	LBABDA				A	
	SIGNAL SENSING	3	LBABC	LHABB	LBABB			AAAAAAAAA
		3	LBABC	LBAJB				
		3	LBABC	LBARB				
		3	LBABC	LBAC				
		3	LBABC	LBAP				
		3	LBABC	CF				
83	CONTROL ALTERNATOR	323A92	LBABCA				A	
84	TEMPERATURE AMPLIFIER	323A93	LBABCB				A	
	EXHAUST GAS THERMOCOUPLE	351424	LBABCC				A	
86	BRANCHED CABLE	323A91	LBABCD				A	
01*	FUEL DELIVERY TO LH ENGINE	4	LBBA	KBA	LBADA			0A9595530
		4	LBBA	BBB				
	FUEL DELIVERY TO ENGINES		LBBA		LBABC			AAAAAAAAA
	STRAINER/DRAIN VALVE	429C1*	LBBAA				A	
	MANIFOLD SHUTOFF VALVE	446136	LBBAB				A	
	ENGINE FEED MANIFOLD	446137	LBBAC				A	
16	LH PUMP CHECK VALVE	446133	LBBBC				1	
	L DROP TANK PILOT VALVE	446222	LBBHJ				A	
	L DROP TANK FUEL CONTROL V	446224	LBBHK				A	
	L DROP TANK FUEL DISCONNECT	44623*	LBBHL				A	
	L DROP TANK FUEL SHUTOFF V	446226	LBBHM				A	
	L DROP TANK	446232	LBBHP				A	
	L DROP TANK AIR DISCONNECT	446218	LBBJF				A	
	L DROP TANK PRESS/VENT V	44621D	LBBJG				A	
	L DROP TANK PRESS REGULATOR	446215	LBBJH				A	
	LH HOT AIR CHECK VALVE	446216	LBBJJ				A	
	L PRESSURE CHECK FITTING	44621C	LBBJK				A	
	L FUEL FLOW SWITCH	44622A	LBBKB				A	
	L WING I/B LEVEL SHUTOFF V	446178	LBBLA				A	
	L WING O/B LEVEL SHUTOFF V	446178	LBBLB				A	
	L WING TANK	446171	LBBLC				A	
	L WING TANK PRESS REGULATOR	446112	LBBMA				A	
	L HOT AIR CHECK VALVE	446116	LBBMB				A	
	L WING PRESS CHECK FITTING	446117	LBBMC				A	
	L WING PRESS/VENT VALVE	446118	LBBMD				A	
	L WING TANK DRAIN VALVE	446114	LBBMF				A	
E5	L ENGINE MASTER SWITCH	423A9*	LBBNG				A	
	L PRESSURE TRANSMITTER	451815	LBBEA				A	
	L PRESSURE INDICATOR	451846	LBBEB				A	

	TITLE	NUC	ALPHA	INPUT	DEP FUNC	CD FC	AL FN	SENSITIVITY W 123456789
	L WING TANK LEVEL CONTROL V	446153	LBBPA				A	
	L DROP TANK FEUL SHUTOFF V	446226	LBBHM				A	
	L DROP TANK CONTROL VALVE	446224	LBBHK				A	
	ENGINE OIL DISTRIBUTION	-	LBCA	LBCB	LBCF			0A9595520
	DISTRIBUTION		LBCA		LBAB			AAAAAAAAA
			LBCA		LBAF			AAAAAAAAA
02	OIL NOZZLES	-23A871	0LBCAA				A	
03	OIL TUBING	-23A870	0LBCAB				A	
	OIL SCAVENGE	-	LBCF	LBCA	LBCE			AAAAAAAAA
	SCAVANGE		LBCF		LBABD			333333333
06	NO 1 SCAVENGE PUMP	-23A82	LBCFA				A	
07	NO 2 SCAVENGE PUMP	-23A83	LBCFB				4	
08	NO 3 SCAVENGE PUMP	-23A84	LBCFC				A	
09	CSD FILTER	-42227	LBCFD				A	
10	VARIABLE NOZZLE FILTER	-23A**	LBCFE				2	
11	VARIABLE NOZZLE FILTER	-23A**	LBCFF				2	
12	CHECK VALVE	-23A**	LBCFG				A	
13	SCAVENGE OIL FILTER	-23A**	LBCFH				2	
	OIL SUPPLY	-	LBCE	LBABB	LBCH			AAAAAAAAA
		-	LBCE	LBCF	LBCD			AAAAAAAAA
		-	LBCE		LKAU			AAAAAAAAA
17	OIL TANK	-23A0800	LBCEA				A	
18	PRESSURIZE/VACUUM VALVE	-23A8910	LBCEB				A	
19	CHECK VALVE	-23A85**	0BCEC				A	
	LOW LEVEL WARNING	-	LBCM	LBCE	H			022222220
		-	LBCM	KAE				
	OIL LEVEL AMPLIFIER	-23A9*	LBCMA				A	
	LOW LEVEL WARNING LIGHT	-23A9*	LBCMB				A	
	OIL LEVEL SENSOR	-23A9*	LBCMC				A	
	5 AMP FUSE	-23A9*	LBCMD				A	
	PRESSURE GENERATION	-	LBCD	LBCE	LBCG			AAAAAAAAA
		-	LBCD	LBAK	LBABD			084444430
		-	LBCD		LBCC			AAAAAAAAA
29	MAIN OIL PUMP	-23A81	LBCDA				A	
	OIL PRESSURE INDICATION	-	LBCG	LBCD	H			999999999
		-	LBCG	KAD				
	5 AMP FUSE	-23A9*	LBCGA				A	
	PRESSURE TRANSMITTER	-51434	LBCGB				A	
	PRESSURE INDICATOR	-51433	LBCGC				A	
	PRESSURE REGULATION	-	LBCC	LBCD	LBCB			AAAAAAAAA
36	RELIEF VALVE	-23A8*	LBCCA				A	
	TEMPERATURE CONTROL	-	LBCB	BAZ	LBCA			AAAAAAAAA
		-	LBCB	LBADD	LBCJ			033333330
		-	LBCB	LBCC				
39	AIR OIL COOLER	-23A8*	LBCBA				3	
40	MAIN FUEL OIL COOLER	-23A84	LBCBB				A	
41	AOB FUEL OIL COOLER	-23A72	LBCBC				1	
42	TEMPERATURE REGULATOR	-23A86	LBCBD				A	
	OIL TEMPERATURE INDICATION	-	LBCJ	LBCB	H			033333330
	THERMOCOUPLE SENSOR	-51424	LBCJA				A	
	TEMPERATURE INDICATOR	-51425	LBCJB				A	

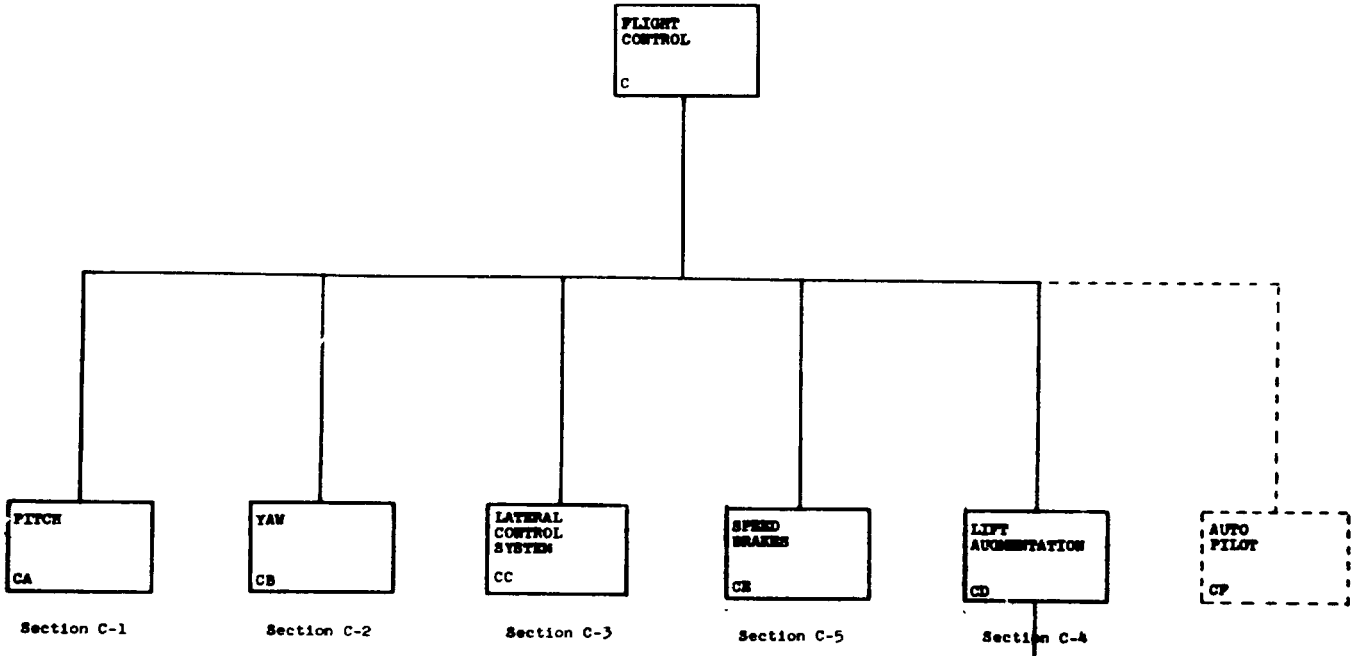

Aircraft: F-4J

Title: Functional Diagram
FLIGHT CONTROL SECTION

Document: NA

rev. date NA

Date: 23 Apr 1969

Section C

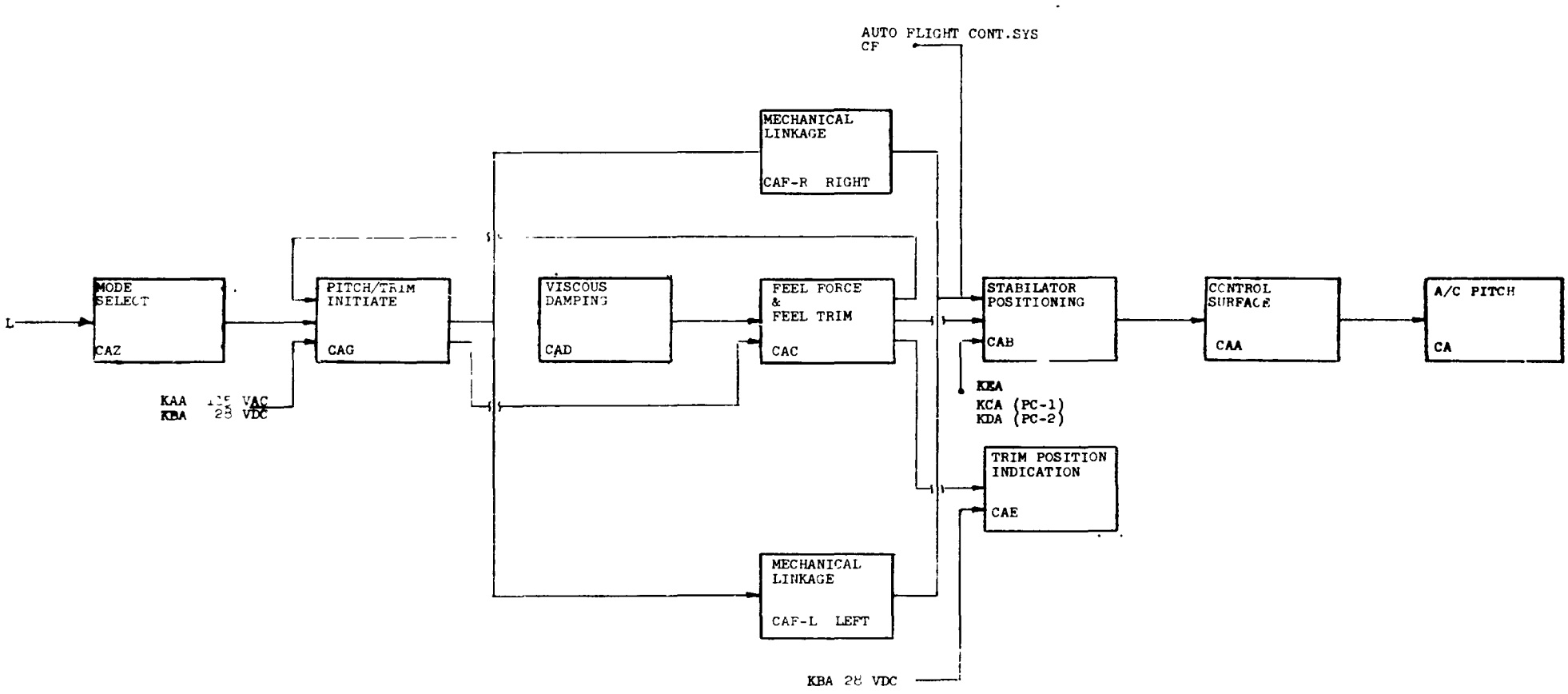

Aircraft: F-4J

Title: Functional Diagram

STABILIZER CONTROL SYSTEM (PITCH)

Document: **rev. date**

Date:

Revised Ma 1969 ARINC

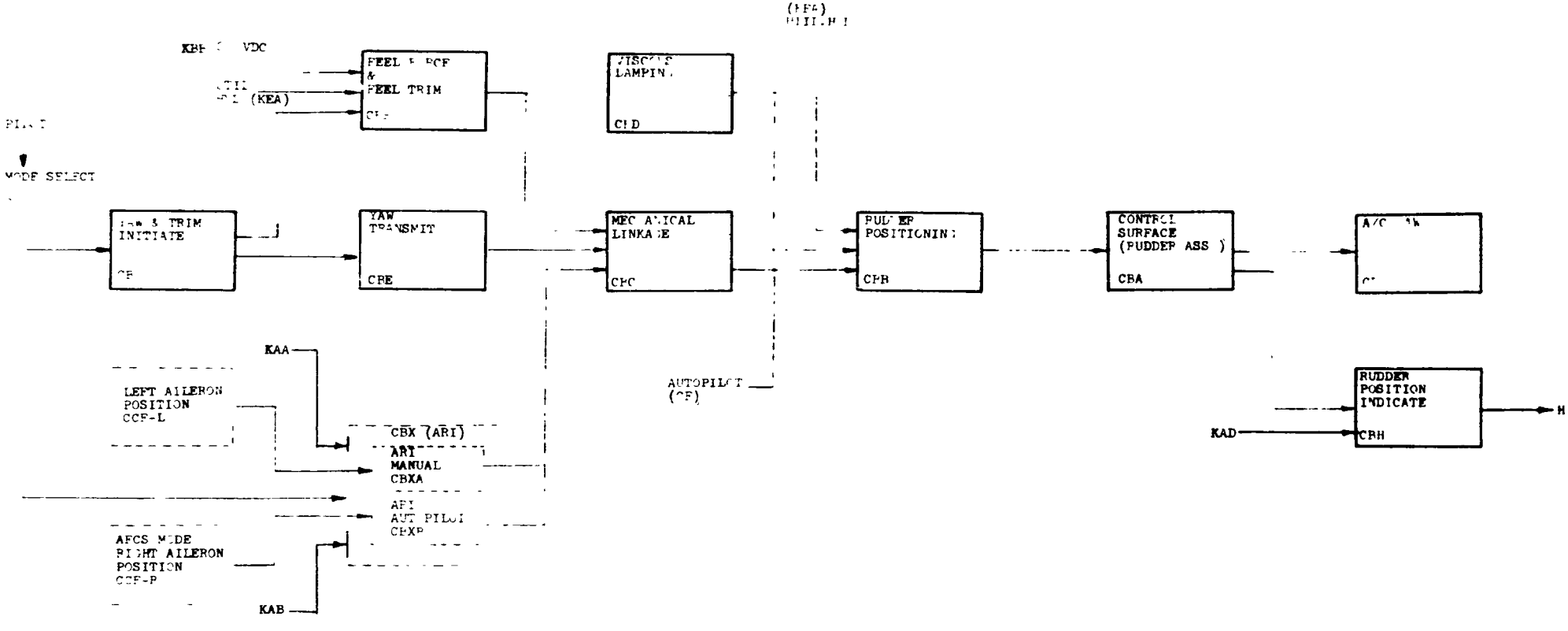

Aircraft: F-4J	
Title: Functional Diagram	
Document:	**rev. date**
Date:	

ARINC

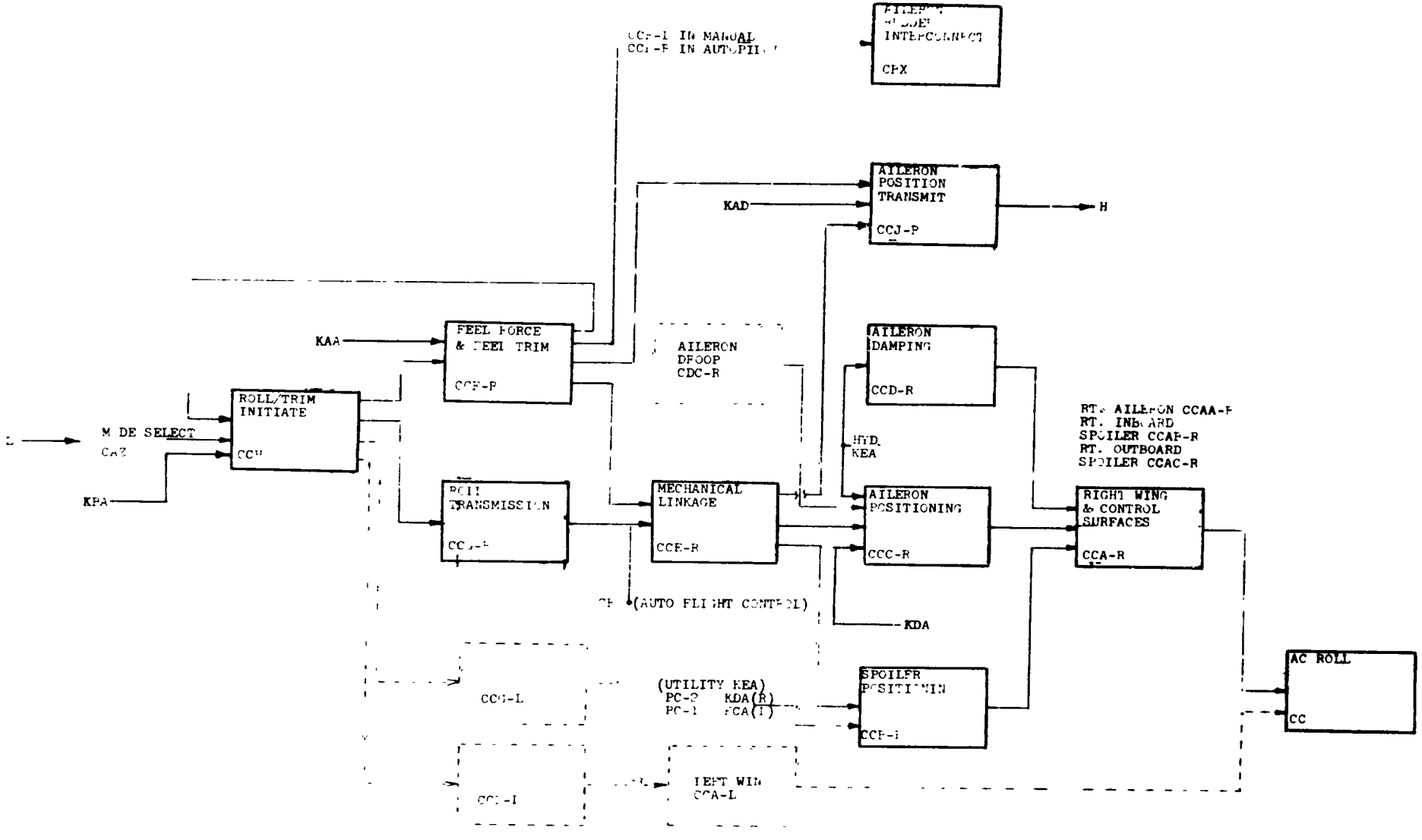

Aircraft: F-4J	
Title: Functional Diagram	
Document:	**rev. date**
Date:	

ARINC

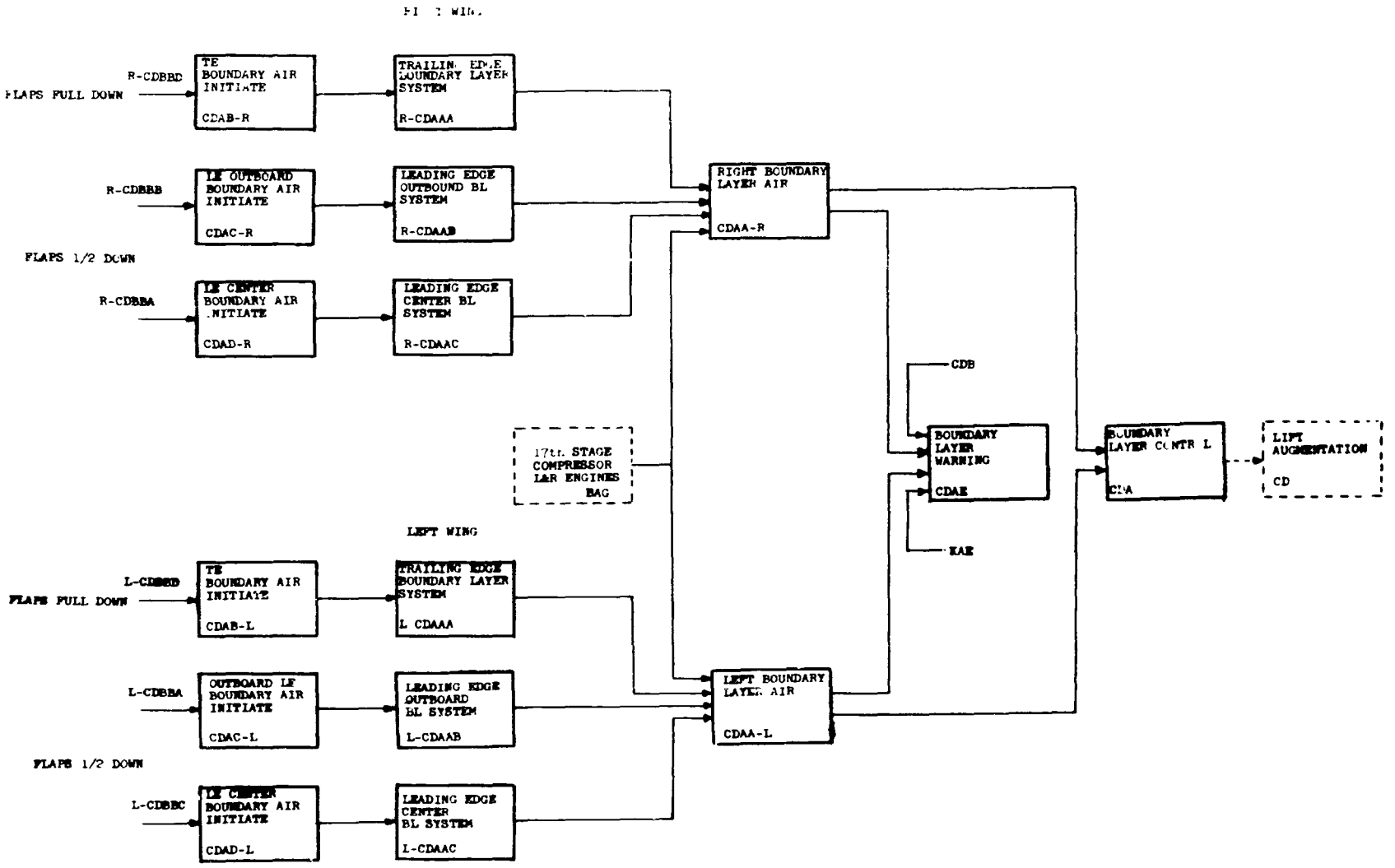

Aircraft: F-4J	
Title: Functional Diagram	
Document:	**rev. date**
Date:	

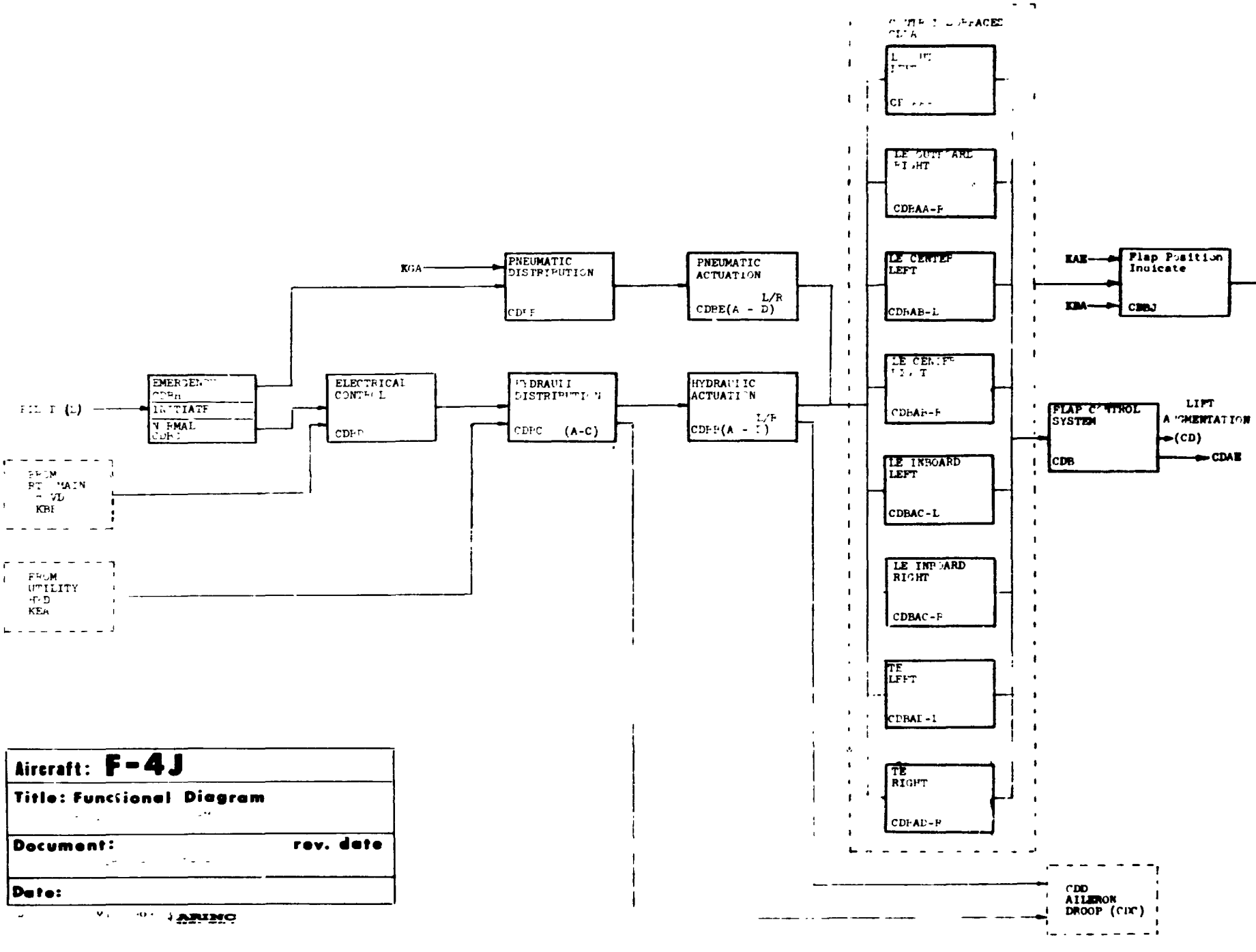

Aircraft: F-4J	
Title: Functional Diagram	
Document:	**rev. date**
Date:	

ARINC

DROOP AILERON HYDRAULIC
F-4J 1-30712 thru 154[illegible] ai

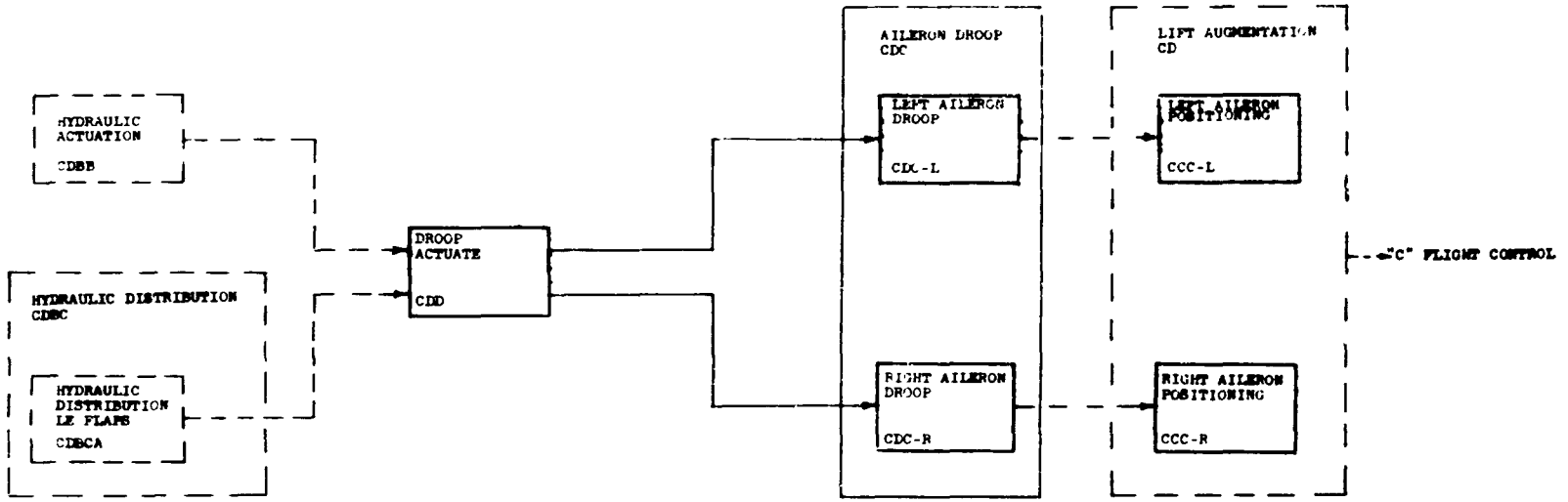

DROOP AILERON ELECTRIC
F-4J 154786 ag & up

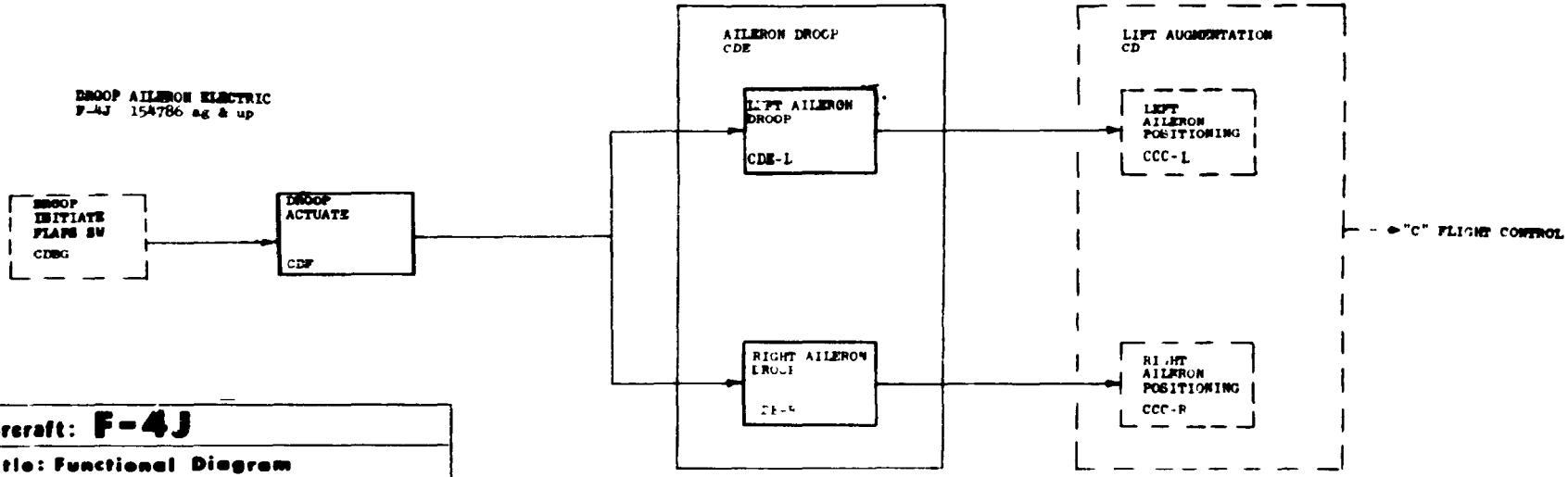

Aircraft: F-4J	
Title: Functional Diagram	
Document:	**rev. date**
Date:	

Revised [illegible]

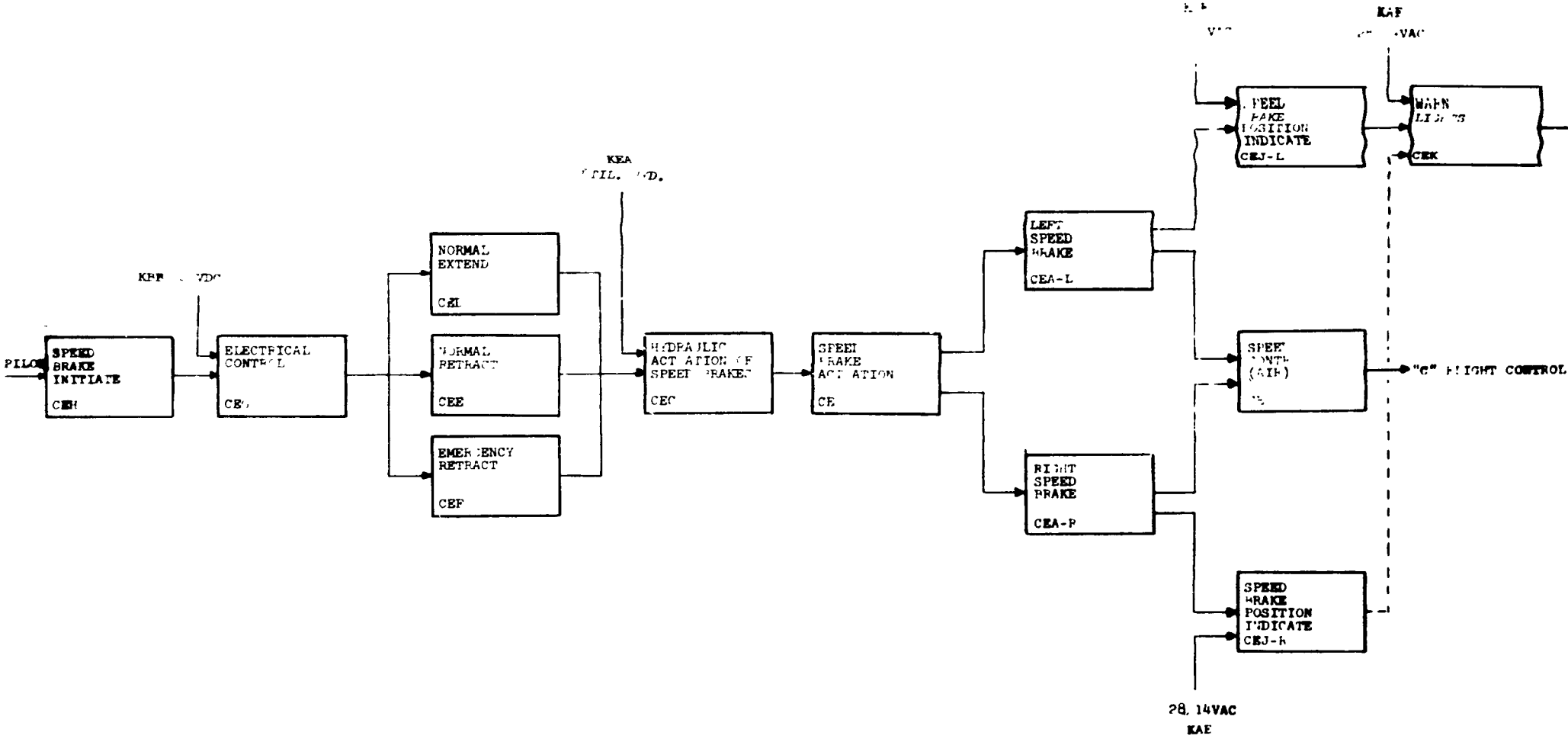

Aircraft: F-4J	
Title: Functional Diagram	
Document:	**rev. date**
Date:	

TITLE	WUC	ALPHA	INPUT	DEP FUNC	CD AL FC FN	SENSITIVITY M 123456789
•FLIGHT CONTROLS		C	EA			0AAAAAAAA0
		C	EB			
		C	EC			
		C	ED			
		C	EE			
		C	EF			
•AIRCRAFT PITCH		CA	CAA	C		0AAAAAAAA0
CONTROL SURFACE		CAA	CAB	CA		AAAAAAAAA
STABILATOR ASSEMBLY	14310	CAAA			A	
COVER ASSEMBLY	14311	CAAB			2	
STEEL TE HONEYCOMB	14312	CAAC			2	
ALUM TE HONEYCOMB	14313	CAAD			2	
SLOTTED LEADING EDGE	14314	CAAE			5	
HINGE FITTING	14315	CAAF			A	
STABILATOR TIP	14316	CAAG			2	
STABILATOR SKIN	14317	CAAH			2	
ACTUATOR FITTING	14318	CAAJ			A	
•STABILATOR POSITIONING		CAB	CP	CAA		AAAAAAAAA
		CAB	KCA			
		CAB	KBA			
		CAB	CAC			
		CAB	RCAF			
		CAB	LCAF			
		CAB	KEA			
STABILATOR POWER CNT CYL	14326	CABA			A	
TORQUE TUBE ASSEMBLY	1433A	CABB			A	
FORCE LINK SWITCH	14338	CABC			0	
FORCE LINK SPRING CARTRIDGE	14338	CABD			A	
POWER CONTROL VALVE	14327	CABE			A	
CONTROL ROD	14328	CABF			A	
FORCE LINK BELLCRANK	1432A	CABG			A	
STAB CONTROL HORN	1432•	CABH			A	
OVERRIDE SPRING CARTRIDGE	14336	CABJ			A	
•MECHANICAL LINKAGE RIGHT		RCAF	CAG	CAB		999999999
CONTROL CABLE	1432C	RCAFA			•	
BELLCRANK	1432•	RCAFB			A	
TURNBUCKLES	1432•	RCAFC			A	
PULLEY	1432•	RCAFD			A	
•MECHANICAL LINKAGE LEFT		LCAF	CAG	CAB		999999999
CONTROL CABLE	1432C	LCAFA			A	
BELLCRANK	1432•	LCAFB			A	
TURNBUCKLES	1432•	LCAFC			A	
PULLEY	1432•	LCAFD			A	
•PITCH AND TRIM INITIATE		CAB	CAC	RCAF		AAAAAAAA1
		CAB	CAZ	LCAF		AAAAAAAAA

TITLE	WUC	ALPHA	INPUT	DEP FUNC	CD AL FC FN	SENSITIVITY M 123456789
		CAB	KAA			
		CAB	KBA			
TORQUE TUBE BELLCRANK	1433•	CABA			A	
PUSH ROD	1433•	CABB			A	
TORQUE TUBE	14118	CCMA			A	
CONTROL STICK ASSY	14110	CCMB			A	
TRIM SWITCH	14115	CCMC			A	
•FEEL FORCE AND FEEL TRIM		CAC	CAD	CAG		AAAAAAAAA
		CAC	CAG	CAB		072222270
		CAC		CAE		AAAAAAAAA
FEEL TRIM ACTUATOR	14331	CACA			A	
BELLOWS ASSY	14332	CACB			A	
LINK ASSY	1433E	CACC			A	
FEEL TRIM PICKUP PROBE HTR	14337	CACD			A	
TRIM VENTURI HEATER	14338	CACE			A	
TRIM RELAY PANEL	1433C	CACF			A	
IDLER ASSY	1433D	CACG			A	
LIMIT SWITCH	1433E	CACH			A	
FEEL SYSTEM PISTON	14329	CACJ			A	
FEEL SYSTEM BALANCE ASSY	14323	CACK			A	
LONG BELLOWS BELL	14324	CACL			A	
FEEL SYSTEM BALANCE	14321	CACM			A	
•VISCOUS DAMPING		CAD		CAC		022222220
STAB VISCOUS DAMPER	14334	CADA			A	
•TRIM POSITION INDICATE		CAE	KBE	M		001000020
		CAE	CAC			
POSITION TRANSMITTER	51025	CAEA			1	
STAB POSITION INDICATOR	5102A	CAEB			A	
MODE SELECT		CAZ	L	CAB		0A\AAAAA0
•AIRCRAFT YAW		CB	CBA	C		0[[222200
•CONTROL SURFACE		CBA	CBB	CBM		AAAAAAAAA
		CBA		CB		AAAAAAAAA
RUDDER ASSEMBLY	14410	CBAA			A	
HORN ASSY	14411	CBAB			A	
TE HONEYCOMB	14412	CBAC			2	
TE ASSY	14413	CBAD			A	
RUDDER STRUCTURE	14414	CBAE			A	
HINGE FITTING	1441A	CBAF			A	
COUNTER BALANCE WEIGHT	1441•	CBAG			5	
RUDDER ROTARY DAMPER	14496	CBAH			0	
•RUDDER POSITIONING		CBB	CBD	CBA		AAAAAAAAA
		CBB	CBC			
		CBB	CP			
		CBB	KEA			
RUDDER POWER CONTROL CYL	14423	CBBA			A	
•MECHANICAL LINKAGE		CBC	CBE	CBB		AAAAAAAAA
		CBC	CBF			
		CBC	CBH			

TITLE	WUC	ALPHA	INPUT	DEP FUNC	CD AL SENSITIVITY FC FN M 123456789
WALKING BEAM BELLCRANK	14420	CBCA			A
•VISCOUS DAMPING		CBD		CBB	099999990
RUDDER VISCOUS DAMPER	14424	CBDA			A
RELIEF VALVE	14420	CBDB			A
CHECK VALVE	14420	CBDC			A
•FEEL FORCE AND FEEL TRIM		CBF	CBG	CBC	072222270
		CBF	KEA		
		CBF	KAB		
RUDDER FEEL SELECTOR VALVE	14433	CBFA			A
RUDDER FEEL CYLINDER	14432	CBFB			A
ACTUATOR ASSY	14331	CBFC			A
IDLER ASSY	14436	CBFD			A
RUDDER AIR SPEED SWITCH	1442E	CBFE			A
•YAW TRANSMIT		CBE	CBG	CBC	AAAAAAAAA
RUDDER CONTROL CABLES	14420	CBEA			A
CABLE PULLEY	14420	CBEB			5
BELLCRANK	14420	CBEC			A
CONTROL RODS	14420	CBED			A
•YAW AND TRIM INITIATE		CBG	CAZ	CBF	AAAAAAAAA
		CBG		CBE	AAAAAAAAA
RUDDER PEDALS	14428	CBGA			A
TRIM SWITCH	14435	CBGB			A
RUDDER TRIM TRANSMITTER	51624	CBGC			A
•RUDDER POSITION INDICATE		CBM	KAD	M	031000010
RUDDER POSITION TRANSMITTER	51624	CBMA			A
RUDDER POSITION INDICATOR	51623	CBMB			A
•MODE SELECTION		CAZ	L	CBG	AAAAAAAAA
•AILERON RUDDER INTERCONNECT		CBX	CRXA	CBC	011111110
		CBX	CRXB		
		CBX	CAZ		
		CBX	KAB		
		CBX	KAA		
ARI MANUAL		CBXA	LCCF	CBC	011111110
ARI SERVO ACTUATOR	14422	CBXAA			A
ARI SERVO	14421	CBXAB			A
ARI AUTO		CBXB	RCCF	CBC	011111110
ARI SERVO ACTUATOR	14422	CBXAA			A
ARI SERVO	14421	CBXAB			A
•AIRCRAFT ROLL		CC	RCCA	C	0AAAAAAA0
		CC	LCCA		
•RT WING CONTROL SURFACES		RCCA	RCCB	CC	0966 690
		RCCA	RCCC		
		RCCA	RCCJ		
RIGHT AILERON ASSY	14210	RCCAA			A
RIGHT INBOARD SPOILER ASSY	14240	RCCAB			2
RIGHT OUTBOARD SPOILER ASSY	14240	RCCAC			2
•AILERON DAMPING		RCCD	KEA	HCCA	062222240
DAMPER CYLINDER ASSY	14221	RCCDA			A

TITLE	WUC	ALPHA	INPUT	DEP FUNC	CD AL SENSITIVITY FC FN M 123456789
RELIEF VALVE	14229	RCCDR			A
•SPOILER POSITIONING		RCCB	RCCE	RCCA	021111130
		RCCB	KDA		
		RCCB	KEA		
INBOARD SPOILER PWR CYL	14252	RCCBA			A
OUTBOARD SPOILER PWR CYL	14252	RCCBB			A
SPOILER FOLLOW UP ROD ASSY	1425•	RCCBBA			A
FOLLOW UP TORQUE TUBE ASSY	1425•	RCCBBB			A
LATERAL CONTROL ROD ASSY	1425•	RCCBBC			A
DUAL SERVO VALVE	14253	RCCBBD			A
•AILERON POSITIONING		RCCC	RCCE	RCCA	096666690
		RCCC	KFA		
		RCCC	KDA		
		RCCC	RCDC		
AILERON POWER CONTROL CYL	14222	RCCCA			A
LAT CTRL BELLCRANK ASSY	14225	RCCCB			A
LAT CTRL ROD ASSY	14218	RCCCC			A
•MECHANICAL LINKAGE		RCCE	RCCF	HCCC	AAAAAAAAA
		RCCE	RCCG	RCCJ	AAAAAAAAA
		RCCE	CF	RCCR	AAAAAAAAA
WALKING BEAM BELLCRANK	14271	RCCEA			A
IDLER ASSEMBLY	14272	RCCEC			A
LATERAL CONTROL LINKAGE	14270	RCCED			A
•FEEL FORCE AND FEEL TRIM		RCCF	CCH	CCH	072222270
		RCCF	KAA	CCF	AAAAAAAAA
		RCCF		CBX	AAAAAAAAA
CARTRIDGE JACK ACTUATOR	14262	RCCFA			A
TRIM ROTARY ACTUATOR	14261	RCCFB			A
FLEX DRIVE CABLE	14266	RCCFC			A
ELECTRICAL CONTROL	1426•	RCCFD			A
ARI POSITION TRANSDUCER	5162R	CCFE			A
•ROLL TRANSMISSION		RCCG	CCH	HCCE	096666690
OVERRIDE SPRING CARTRIDGE	14223	RCCGA			A
LINKAGE	1422•	RCCGR			A
•AILERON POSITION TRANSMIT		RCCJ	RCCE	M	031000010
		RCCJ	CCF		
		RCCJ	KAL		
WING POSITION TRANSMITTER	51622	RCCJA			A
AILERON POSITION INDICATOR	51621	RCCJR			A
•LEFT WING CONTROL SURFACES		LCCA	LCCH	CC	096666690
		LCCA	LCCC		
		LCCA	LCCD		
LEFT AILERON ASSEMBLY	14210	LCCAA			A
LEFT INBOARD SPOILER ASSY	14240	LCCAB			2
LEFT OUTBOARD SPOILER ASSY	14240	LCCAC			2
•AILERON DAMPING		LCCD	KEA	LCCA	062222260
DAMPER CYLINDER ASSY	14221	LCCDA			A
RELIEF VALVE	14229	LCCDR			A

TITLE	WUC	ALPHA	INPUT	DEP FUNC	CD AL SENSITIVITY FC FN M 1234567890
•SPOILER POSITIONING		LCCB	LCCL	LCCA	021111120
		LCCB	KEA		
		LCCB	KCA		
INBOARD SPOILER PWR CYL	14292	LCCBA			A
OUTBOARD SPOILER PWR CYL	14292	LCCBB			A
SPOILER FOLLOW UP ROD ASSY	1429•	LCCBBA			A
FOLLOW UP TORQUE TUBE ASSY	1429•	LCCBBB			A
LATERAL CONTROL ROD ASSY	1429•	LCCBBC			A
DUAL SERVO VALVE	14293	LCCBBD			A
•AILERON POSITIONING		LCCC	LCCL	LCCA	096666690
		LCCC	LCDC		
		LCCC	KEA		
		LCCC	KCA		
AILERON POWER CONTROL CYL	14222	LCCCA			A
LAT CTRL BELLCRANK ASSY	14225	LCCCB			A
LAT CTRL ROD ASSY	1421W	LCCCC			A
•MECHANICAL LINKAGE		LCCE	LCCH	LCCC	AAAAAAAAA
		LCCE	LCCG	LCCJ	AAAAAAAAA
		LCCE	CF	LCCB	AAAAA1AAA
WALKING BEAM BELLCRANK	14271	LCCEA			A
IDLER ASSY	14272	LCCEC			A
LATERAL CONTROL LINKAGE	14270	LCCED			A
•FEEL FORCE AND FEEL TRIM		LCCF	CCH	CCM	072222270
		LCCF	KAA	CCE	AAAAAAAAA
		LCCF		CBX	AAAAAAAAA
CARTRIDGE JACK ACTUATOR	14262	LCCFA			A
TRIM ROTARY ACTUATOR	14261	LCCFB			A
FLEX DRIVE CABLE	14266	LCCFC			A
ELECTRICAL CONTROL	14269	LCCFD			A
ARI POSITION TRANSDUCER	5102R	LCCFE			A
•ROLL TRANSMISSION		LCCG	CCH	LCCE	096666690
OVERRIDE SPRING CARTRIDGE	14223	LCCGA			A
LINKAGE	14119	LCCGB			A
•AILERON POSITION TRANSMIT		LCCJ	LCCF	M	030000010
		LCCJ	LCCL		
		LCCJ	KAL		
WING POSITION TRANSMITTER	51622	LCCJA			A
AILERON POSITION INDICATOR	51621	LCCJB			A
•ROLL AND TRIM INITIATE		CCM	LCCF	LCCF	099999990
		CCM	RCCF	RCCF	099999990
		CCM	CAZ	LCCG	AAAAAAAAA
		CCM	KBA	RCCG	AAAAAAAAA
LATERAL TORQUE TUBE	14118	CCMA			A
CONTROL STICK ASSY	14110	CCMB			A
TRIM SWITCH	14115	CCMC			A
•MODE SELECT		CAZ	L	CCM	AAAAAAAAA
LIFT AUGMENTATION		CD	CDA	C	040000270
		CD	CDB		

TITLE	WUC	ALPHA	INPUT	DEP FUNC	CD AL SENSITIVITY FC FN M 1234567A9
		CD	CDC		
BOUNDARY LAYER CONTROL		CDA	RCDAA	CD	040000440
		CDA	LCDAA		
•RIGHT BOUNDARY LAYER AIR		RCDAA	RCDAAA	CDA	AAAAAAAAA
		RCDAA	RCDAAB	CDAE	AAAAAAAAA
		RCDAA	RCDAAC		
		RCDAA	BAM		
•RIGHT TE BOUNDARY LAYER SYS		RCDAAA	RCDAB	RCDAA	0A0000880
DUCT	41941	RCDAAAA			A
SHUTOFF VALVE	41942	RCDAAAB			A
TE INDICATOR	51731	RCDAAAC			1
TE TRANSMITTER	51714	RCDAAAD			1
SHUTOFF VALVE SWITCH	41947	RCDAAAE			A
CLAMP	41946	RCDAAAF			A
SEAL	41948	RCDAAAG			A
OUTLET NOZZLE	4194A	RCDAAAH			A
TE POSITION SWITCH	4194B	RCDAAAJ			A
•RIGHT LE CENTER WING SYSTEM		RCDAAC	RCDAD	RCDAA	0A0000880
W/B BLC BELLOWS	41921	RCDAACA			A
INNER OUTBOARD CHAMBER	41922	RCDAACB			A
CENTER CHAMBER	41923	RCDAACC			A
INNER CHAMBER	41924	RCDAACD			A
OUTBOARD CHAMBER	41925	RCDAACE			A
CLAMP	41926	RCDAACF			A
COUPLING	41927	RCDAACG			A
FLEXIBLE SEAL	41928	RCDAACH			A
LE INDICATOR	52711	RCDAACJ			1
LE TRANSMITTER	51712	RCDAACK			1
•RIGHT LE OUTER WING SYSTEM		RCDAAB	RCDAC	RCDAA	0A0000880
BELLOWS ASSY	41931	RCDAAHA			A
DUCT	41932	RCDAAHB			A
LE CUTOFF VALVE	41933	RCDAAHC			A
CLAMP	41934	RCDAAHD			A
COUPLING	41935	RCDAAHE			A
FLEXIBLE SEAL	41936	RCDAAHF			A
SHUTOFF VALVE SWITCH	41937	RCDAAHG			A
SHUTOFF VALVE LINK	41938	RCDAAHH			A
•RIGHT TE BNDRY AIR INITIATE		RCDAB	RCDBBD	RCDAAA	AAAAAAAAA
•RIGHT LE CENTER AIR INITIAT		RCDAC	RCDBBA	RCDAAC	AAAAAAAAA
•RIGHT LE OUTBRD AIR INITIAT		RCDAD	RCDBBC	RCDAAB	AAAAAAAAA
•LEFT BOUNDARY LAYER AIR		LCDAA	LCDAAA	CDA	AAAAAAAAA
		LCDAA	LCDAAB	CDAE	AAAAAAAAA
		LCDAA	LCDAAC		
		LCDAA	BAG		
•LEFT TE BOUNDARY LAYER SYS		LCDAAA	LCDAB	LCDAA	0A0000880
DUCT	41941	LCDAAAA			A
SHUTOFF VALVE	41942	LCDAAAB			A
TE INDICATOR	51731	LCDAAAC			1

TITLE	WUC	ALPHA	INPUT	DEP FUNC	CO FC	AL FN	SENSITIVITY W 123456789
TE TRANSMITTER	91714	LCDAAAD				1	
SHUTOFF VALVE SWITCH	41947	LCDAAAE				A	
CLAMP	41946	LCDAAAF				A	
SEAL	41948	LCDAAAG				A	
OUTLET NOZZLE	41944	LCDAAAH				A	
TE POSITION SWITCH	41948	LCDAAAJ				A	
*LEFT LE CENTER WING SYSTEM		LCDAAC	LCDAD	LCDAA			040000080
W/B BLC BELLOWS	41921	LCDAACA				A	
INNER OUTBOARD CHAMBER	41922	LCDAACB				A	
CENTER CHAMBER	41923	LCDAACC				A	
INNER CHAMBER	41924	LCDAACD				A	
OUTBOARD CHAMBER	41925	LCDAACE				A	
CLAMP	41926	LCDAACF				A	
COUPLING	41927	LCDAACG				A	
FLEX SEAL	41928	LCDAACH				A	
LE INDICATOR	92711	LCDAACJ				1	
LE TRANSMITTER	91712	LCDAACK				1	
*LEFT LE OUTER WING SYSTEM		LCDAAB	LCDAC	LCDAA			040000080
BELLOWS ASSY	41931	LCDAABA				A	
DUCT	41932	LCDAABB				A	
LE CUTOFF VALVE	41933	LCDAABC				A	
CLAMP	41934	LCDAABD				A	
COUPLING	41935	LCDAABE				A	
FLEXIBLE SEAL	41936	LCDAABF				A	
SHUTOFF VALVE SWITCH	41937	LCDAAHG				A	
SHUTOFF VALVE LINK	41938	LCDAAHH				A	
*LEFT TE BNDRY AIR INITIATE		LCDAB	LCDBBD	LCDAAA			AAAAAAAAA
*LEFT LE CNTR AIR INITIATE		LCDAC	LCDBBA	LCDAAB			AAAAAAAAA
*LEFT LE OUTBRD AIR INITIATE		LCDAD	LCDBBC	LCDAAC			AAAAAAAAA
*BOUNDARY LAYER WARNING		CDAE	RCDAA	W			AAAAAAAAA
		CDAE	LCDAA				
		CDAE	RAL				
		CDAE	CDb				
MALFUNCTION LIGHT	41991	CDAEA				A	
LIMIT SWITCH	41992	CDAEb				A	
*FLAP CONTROL SYSTEM	14900	CDB	CDbA	CD			070000770
		CDB		CDAL			AAAAAAAAA
*CONTROL SURFACES		CDBA	CDBB	CDB			AAAAAAAAA
		CDBA	CDbF				
LE LEFT OUTBOARD FLAP	14930	LCDBAA	LCDBBA	CDBA			AAAAAAAAA
		LCDBAA	LCDbE				
LE RIGHT OUTBOARD FLAP	14930	RCDBAA	RCDBBA	CDBA			AAAAAAAAA
		RCDBAA	RCDbE				
LE CENTER LEFT FLAP	14920	LCDBAB	LCDBBB	CDBA			AAAAAAAAA
		LCDBAB	LCDBF				
LE CENTER RIGHT FLAP	14920	RCDBAB	RCDBBB	CDBA			AAAAAAAAA
		RCDBAB	RCDBE				
LE INBOARD LEFT FLAP	14910	LCDBAC	LCDBBC	CDBA			AAAAAAAAA

TITLE	WUC	ALPHA	INPUT	DEP FUNC	CO FC	AL FN	SENSITIVITY W 123456789
		LCDBAC	LCDbF				
LE INBOARD RIGHT FLAP	14910	RCDBAC	RCDBBC	CDBA			AAAAAAAAA
		RCDBAC	RCDBF				
TE LEFT FLAP	14940	LCDBAD	LCDBBD	CDBA			AAAAAAAAA
		LCDBAD	LCDbF				
TE RIGHT FLAP	14940	RCDBAD	RCDBBD	CDBA			AAAAAAAAA
		RCDBAD	RCDbE				
*HYDRAULIC ACTUATION OF FLAP		CDBB	CDBC	CDBA			999999999
*HYD ACT LE LEFT OUTBOARD		LCDBBA	LCDBCA	LCDBAA			AAAAAAAAA
		LCDBBA		LCDAC			AAAAAAAAA
ACTUATING CYLINDER	14958	LCDBBAA				A	
ONE WAY RESTRICTOR VALVE	1499•	LCDBBAB				A	
SHUTTLE VALVE	1499•	LCDBBAC				A	
ONE WAY RESTRICTOR	1499•	LCDBBAD				A	
*HYD ACT LE RIGHT OUTBOARD		RCDBBA	CDBCA	RCDBAA			AAAAAAAAA
		RCDBBA		RCDAC			AAAAAAAAA
ACTUATING CYLINDER	14958	RCDBBAA				A	
ONE WAY RESTRICTOR VALVE	1499•	RCDBBAB				A	
SHUTTLE VALVE	1499•	RCDBBAC				A	
ONE WAY RESTRICTOR	1499•	RCDBBAD				A	
*HYD ACT LE CENTER LEFT		LCDBBB	CDBCB	LCDBAB			AAAAAAAAA
ACTUATING CYLINDER	14957	LCDBBBA				A	
ONE WAY RESTRICTOR	1499•	LCDBBBB				A	
SHUTTLE VALVE	1499•	LCDBBBC				A	
ONE WAY RESTRICTOR	1499•	LCDBBBD				A	
*HYD ACT LE CENTER RIGHT		RCDBBB	CDBCB	RCDBAB			AAAAAAAAA
ACTUATING CYLINDER	14957	RCDBBBA				A	
ONE WAY RESTRICTOR	1499•	RCDBBBB				A	
SHUTTLE VALVE	1499•	RCDBBBC				A	
ONE WAY RESTRICTOR	1499•	RCDBBBD				A	
*HYD ACT LE INBOARD LEFT		LCDBBC	CDBCC	LCDBAC			AAAAAAAAA
		LCDBBC		LCDAD			AAAAAAAAA
ACTUATING CYLINDER	14956	LCDBBCA				A	
ONE WAY RESTRICTOR	1499•	LCDBBCB				A	
SHUTTLE VALVE	1499•	LCDBBCC				A	
ONE WAY RESTRICTOR	1499•	LCDBBCD				A	
*HYD ACT LE INBOARD RIGHT		RCDBBC	CDBCC	RCDBAC			AAAAAAAAA
		RCDBBC		RCDAD			AAAAAAAAA
ACTUATING CYLINDER	14956	RCDBBCA				A	
ONE WAY RESTRICTOR	1499•	RCDBBCB				A	
SHUTTLE VALVE	1499•	RCDBBCC				A	
ONE WAY RESTRICTOR	.499•	RCDBBC				A	
*HYDRAULIC DISTRIBUTION		CDBC	RFA	CDBCA			AAAAAAAAA
		CDBC		CLBCB			AAAAAAAAA
		CDBC		CDBCC			AAAAAAAAA
HYD DIST LE FLAPS		CDBCA	CDBD	CDBB			AAAAAAAAA
		CDBCA		CDC			AAAAAAAAA
HYD SOLENOID SELECTOR VALVE	14952	CDBCAA				A	

TITLE	WUC	ALPHA	INPUT	DEP FUNC	CD AL SENSITIVITY FC FN M 1234567890
ONE WAY RESTRICTOR VALVE	14990	CDDCAR			A
DUMP VALVE OVERBOARD DRAIN	14990	CDDCAC			A
*HYD ACTUATION LEFT TE FLAP		LCDDAD	CDDCB	LCDDAD	A
		LCDDBD	CDDCC	LCDAB	AAAAAAAAAA
ACTUATING CYLINDER	14999	LCDDDA			AAAAAAAAAA
SHUTTLE VALVE	14990	LCDDDA			A
*HYD ACTUATION RIGHT TE FLAP		RCDDAD			A
		RCDDBD	CDDCB	RCDAAD	A
ACTUATING CYLINDER	14999	RCDDDA	CDDCC	RCDAB	AAAAAAAAAA
SHUTTLE VALVE	14990	RCDDDA			AAAAAAAAAA
*HYD DISC TE FLAP HALF DOWN		CDDCB			A
		CDDCB	CDAD	CDD	A
		CDDCB		LCDAAD	AAAAAAAAAA
		CDDCB		RCDAAD	AAAAAAAAAA
					AAAAAAAAAA
HYD FLOW DIVIDER	.4993	CDDCBA			A
ONE WAY RESTRICTOR	14990	CDDCAA			A
ONE WAY RESTRICTOR	14990	CDDCAB			A
HYD SOL SELECTOR VALVE	14992	CDDCAA			A
*HYD DISC TE FLAP FULL DOWN		CDDCC			A
		CDDCC	CDDC	CDD	A
		CDDCC		LCDAAD	AAAAAAAAAA
		CDDCC		RCDAAD	AAAAAAAAAA
HYD FLOW DIVIDER	14993	CDDCCA			AAAAAAAAAA
ONE WAY RESTRICTOR	14990	CDDCCA			A
ONE WAY RESTRICTOR	14990	CDDCCB			A
HYD SOLENOID SELECTOR VALVE	14992	CDDCC			A
*ELECTRICAL CONTROL		CDDD	CDDC	CDAC	A
		CDDD	KBB	CDAF	AAAAAAAAAA
RT OUTBOARD LE UP LIMIT SW	14996	CDDCA			AAAAAAAAAA
LEFT OUTBRD LE UP LIMIT SW	14996	CDDCB			1
RT INBOARD LE UP LIMIT SW	14996	CDDCC			1
LEFT INBOARD LE UP LIMIT SW	14996	CDDCD			1
RT CENTER LE UP LIMIT SW	14996	CDDCE			1
LEFT CENTER LE UP LIMIT SW	14996	CDDCF			1
RT TE UP LIMIT SWITCH	14996	CDDCG			1
LEFT TE UP LIMIT SWITCH	14996	CDDCH			1
RT TE HALF UP LIMIT SWITCH	14996	CDDCJ			1
LEFT TE HALF UP LIMIT SW	14996	CDDCK			1
FLAP AIRSPEED SWITCH	14996	CDDCL			1
*FLAP POSITION INITIATE		CDDC			A
		CDDC	L	CDAD	A
FLAP CONTROL SWITCH	14990	CDDCA		CDF	AAAAAAAAAA
*PNEUMATIC ACTUATION OF FLAP		CDDF	CDDA	L CDAH	AAAAAAAAAA
LEFT OUTBRD ACTUATING CYL	14998	LCDDAA			A
RIGHT OUTBRD ACTUATING CYL	14998	RCDDAA			000000000
LEFT CENTER ACTUATING CYL	14997	LCDDBA			A
RIGHT CENTER ACTUATING CYL	14997	RCDDBA			A
LEFT INBOARD ACTUATING CYL	14996	LCDDCA			A
RIGHT INBOARD ACTUATING CYL	14996	RCDDCA			A
LEFT TE ACTUATING CYLINDER	14999	LCDDADA			A
					A

TITLE	WUC	ALPHA	INPUT	DEP FUNC	CD AL SENSITIVITY FC FN M 1234567890
RIGHT TE ACTUATING CYLINDER	14999	RCDDADA			A
*PNEUMATIC DISTRIBUTION		CDDF	CDDH	FDAE	AAAAAAAAA
		CDDF	KBA		A
LE OUTBRD LEFT SHUTTLE VLV	1499*	LCDDBAC			A
LE OUTBRD RIGHT SHUTTLE VLV	1499*	RCDDBAC			A
LE INBRD LEFT SHUTTLE VALVE	1499*	LCDDBCC			A
LE INBRD RIGHT SHUTTLE VLV	1499*	RCDDBCC			A
LE CENTER LEFT SHUTTLE VLV	1499*	LCDDBAC			A
LE CENTER RIGHT SHUTTLE VLV	1499*	RCDDBAC			A
TE RIGHT SHUTTLE VALVE	1499*	RCDDDDA			A
TE LEFT SHUTTLE VALVE	1499*	LCDDDDA			A
CROSS FITTING	1499*	CDDFA			A
EMER FLAP AIR SELECTOR VLV	1499*	CDDFB			A
PNEUMATIC CHECK VALVE	1499*	CDDFC			A
PNEUMATIC CONNECTOR FITTING	1499*	CDDFD			A
EMER FLAP AIR PRESSURE CAGE	1499*	CDDFE			1
RELIEF VALVE	1499*	CDDFF			A
EMERGENCY FLAP AIR BOTTLE	1499*	CDDFG			A
PNEUMATIC CHECK VALVE	1499*	CDDFH			A
*FLAP EMER POSITION INITIATE		CDDH	L	CDAA	A
*FLAP POSITION INDICATE		CDDJ	KBA	M	AAAAAAAAA
		CDDJ	KBL		090000390
		CDDJ	CDAA		
POSITION TRANSMITTER	>1626	CDDJA			A
POSITION INDICATOR	>1627	CDDJA			A
*AILERON DROOP HYDRAULIC		CDC	LCDC	CD	A
		CDC	RCDC		070000770
*LEFT AILERON DROOP		LCDC	CDD	LCCC	AAAAAAAAA
		LCDC		CDC	AAAAAAAAA
DROOP CYLINDER	.4224	LCDCA			A
*RIGHT AILERON DROOP		RCDC	CDD	RCCC	AAAAAAAAA
		RCDC		CDC	AAAAAAAAA
DROOP CYLINDER	.4224	CDCA			A
*DROOP ACTUATE		CDD	CDDCA	LCDC	AAAAAAAAA
		CDD	CDBA	RCDC	AAAAAAAAA
HYDRAULIC CHECK VALVE	1422*	CDDA			A
MANUAL HYDRAULIC BYPASS VLV	1422*	CDDA			A
2 WAY RESTRICTOR	1422*	CDDC			A
HYDRAULIC FILTER	.422*	CDDF			1
*AILERON DROOP ELECTRICAL		CDE	LCDC	CD	A
		CDE	RCDC		070000770
*LEFT AILERON DROOP		LCDE	CDE	LCCC	AAAAAAAAA
		LCDE		CDF	AAAAAAAAA
ELECTRICAL DROOP ACTUATOR	1422E	LCDEA			A
*RIGHT AILERON DROOP		RCDE	CDE	RCCC	AAAAAAAAA
		RCDE		CDF	AAAAAAAAA
ELECTRICAL DROOP ACTUATOR	1422E	RCDEA			A
*DROOP ACTUATE		CDF	CDAC	RCDF	AAAAAAAAA

	TITLE	WUC	ALPHA	INPUT	DEP FUNC	CD AL FC FN	SENSITIVITY W 123456789
			CDF		LCDE		AAAAAAAAA
	DROOP AIL EXTEND RELAY	1422•	CDFA			A	
	•SPEED CONTROL AIR	9	CE	LCEA	C		000033660
02		9	CE	RCEA			
	•LEFT SPEED BRAKE	9	LCEA	CEB	CE		AAAAAAAAA
		9	LCEA		LCEJ		AAAAAAAAA
05	SPEED BRAKE ASSEMBLY	914610	LCEAA			A	
06	HONEYCOMB SKIN	914611	LCEAB			S	
07	SPEED BRAKE CYLINDER	914623	LCEAC			A	
	•RIGHT SPEED BRAKE	9	RCEA	CEB	CE		AAAAAAAAA
		9	RCEA		RCEJ		AAAAAAAAA
10	SPEED BRAKE ASSEMBLY	914610	RCEAA			A	
11	HONEYCOMB SKIN	914611	RCEAB			S	
12	SPEED BRAKE CYLINDER	914623	RCEAC			A	
	SPEED BRAKE ACTUATION	9	CFB	CEC	LCEA		AAAAAAAAA
		9	CEB		RCEA		AAAAAAAAA
19	FLOW DIVIDER	9	CEBA			A	
	•HYDRAULIC ACTUATION	9	CEC	CED	CEB		AAAAAAAAA
17		9	CEC	CEE			
18		9	CEC	CEF			
19		9	CEC	KEA			
20	SPEED BRAKE SELECTOR VALVE	914621	CECA			A	
21	HYDRAULIC CHECK VALVE	91462•	CECB			A	
	•NORMAL EXTEND	9	CED	CEG	CEC		AAAAAAAAA
24	SPEED BRAKE CONTROL SWITCH	914627	CEDA			A	
25	MANUAL RETRACT SWITCH	91462A	CEFA			A	
26	SPEED BRAKE CIRCUIT BREAKER	91462•	CEGA			A	
	•NORMAL RETRACT	9	CEE	CEG	CEC		000111130
28	SPEED BRAKE CONTROL SWITCH	914627	CEDA			A	
29	MANUAL RETRACT SWITCH	91462A	CEFA			A	
30	SPEED BRAKE CIRCUIT BREAKER	91462•	CEGA			A	
31	SPEED BRAKE RETRACT RELAY	91462•	CEEA			A	
	•EMERGENCY RETRACT	9	CEF	CEG	CEC	K CEE	092222260
33	MANUAL RETRACT SWITCH	91462A	CEFA			A	
	•ELECTRICAL CONTROL	9	CEG	KBB	CED		AAAAAAAAA
		9	CEG	CEH	CEE		AAAAAAAAA
		9	CEG		CEF		AAAAAAAAA
	SPEED BRAKE INITIATE	9	CEH	L	CEG		093111290
	•SPEED BRAKE POSIT IND LEFT	9	LCEJ	LCEA	CEK		AAAAAAAAA
		9	LCEJ	KEA			
39	LEFT SPEED BRAKE POSIT SW	91462•	LCEJA			A	
40	RETRACT LIMIT SWITCH	91462B	LCEJB			A	
	•SPEED BRAKE POSIT IND RIGHT	9	RCEJ	RCEA	CEK		AAAAAAAAA
		9	RCEJ	KEA			
42	RIGHT SPEED BRAKE POSIT SW	91462•	RCEJA			A	
43	RETRACT LIMIT SWITCH	91462B	RCEJB			A	
	•WARNING INDICATE	9	CEK	RCEJ	H		011111110
44		9	CEK	LCEJ			

	TITLE	WUC	ALPHA	INPUT	DEP FUNC	CD AL FC FN	SENSITIVITY W 123456789
		9	CEK	KAE			
45	SPEED BRAKE WARNING LIGHTS	914631	CEKA			A	
46	WARN LIGHTS 5AMP FUSE	91463•	CEKB			A	
	GUIDANCE AND FLT CONTRL SYS	A	CF	ECJ	CAB		001101100
		A	CF		CBB		001101100
		A	CF		RCCE		001101100
		A	CF		LCCE		001101100
			CF		RBFC		AAAAAAAAA
			CF		LBFC		AAAAAAAAA
			CF		RBABC		AAAAAAAAA
			CF		LBABC		AAAAAAAAA
			CF		BDD		AAAAAAAAA
			CF		BGBD		AAAAAAAAA
02	MOTIONAL PICKUP TRANSDUCER	A57112	CFA			A	
03	ENGAGING CONTROLLER	A5711L	CFB			A	
04	PITCH RATE GYRO	A5711A	CFC			A	
05	ROLL RATE GYRO	A5711B	CFD			A	
06	YAW RATE GYRO	A57115	CFE			A	
07	LATERAL ACCELEROMETER	A57117	CFF			A	
08	G LIMITING ACCELEROMETER	A5711A	CFG			A	
09	CONTROL AMPLIFIER	A5711400	CFH			A	
10	AUTOPILOT COUPLER	A5711F	CFJ			A	
11	LATERAL SERIES SERVO ACT	A14291	RCFK			A	
12	LATERAL SERIES SERVO ACT	A14291	LCFK			A	
13	AUTOPILOT WARNING LIGHT	A5711•	CFL			2	
14	AUTOPILOT DISENAGE WARN LT	A5711•	CFM			2	
15	PITCH AUG OFF WARNING LT	A5711•	CFN			2	

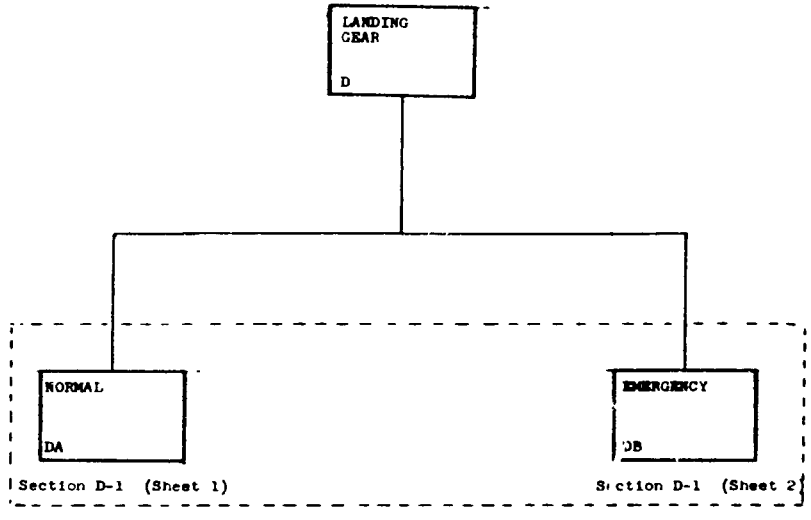

Aircraft: F-4J	
Title: Functional Diagram LANDING GEAR SECTION	
Document: NA	rev. date NA

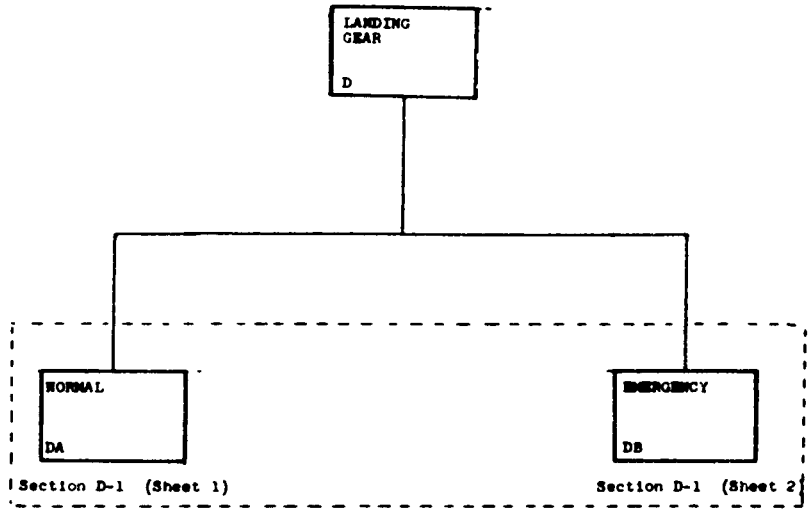

Aircraft: F-4J	
Title: Functional Diagram LANDING GEAR SECTION	
Document: NA	**rev. date** NA
Date:	

Section D

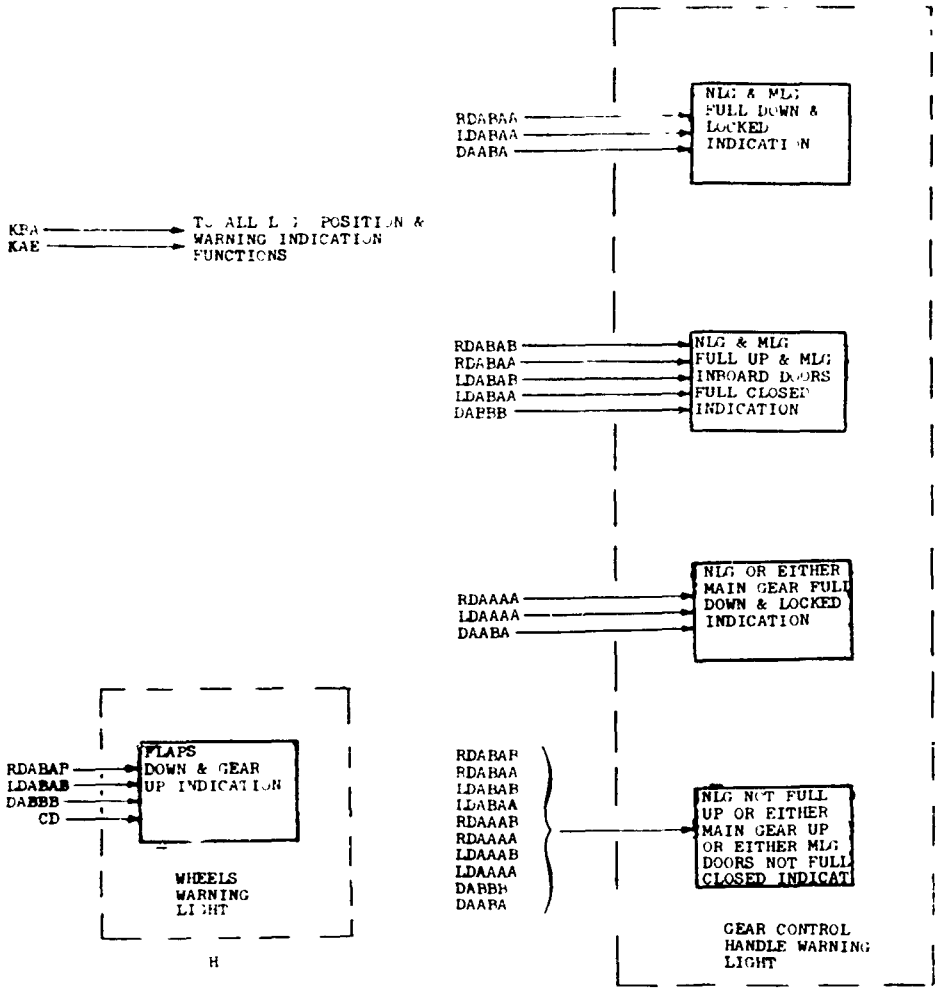

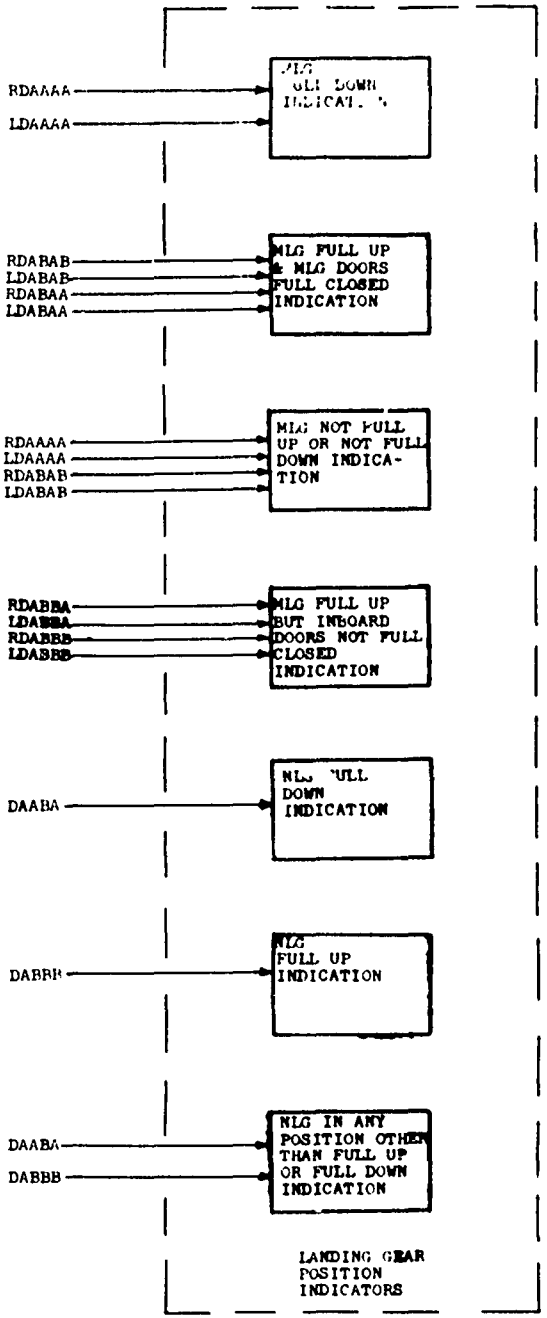

Aircraft: F-4J	
Title: Functional Diagram	(Sheet 1 of 2)
Document:	**rev. date**
Date:	

Revised Ma... ARINC

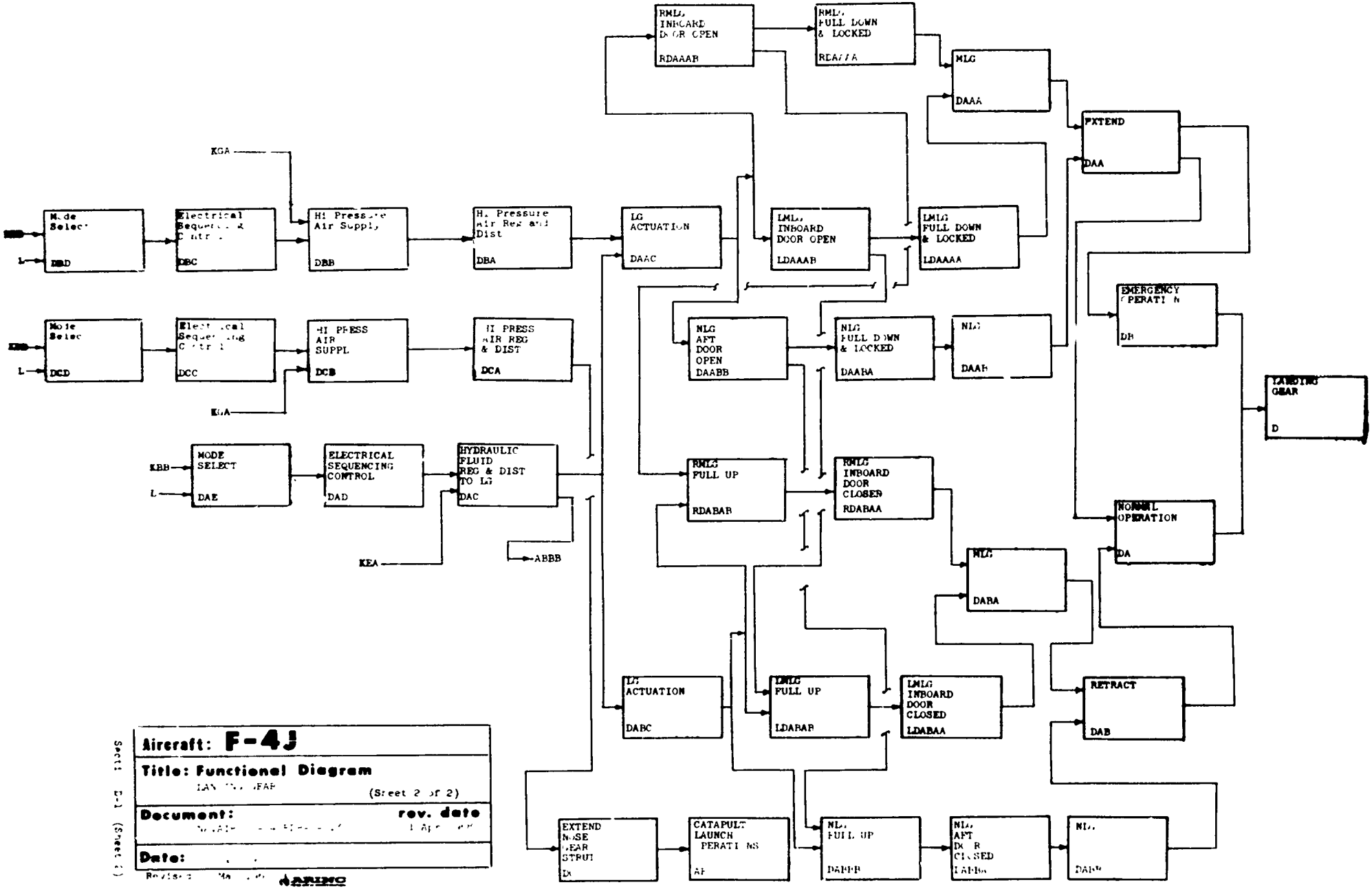

Aircraft: F-4J

Title: Functional Diagram

LANDING GEAR (Sheet 2 of 2)

Document: **rev. date**

[illegible]

Date:

Revised [illegible]

ARINC

Sect. D-1 (Sheet 2)

	TITLE	WUC	ALPHA	INPUT	DEP FUNC	CD AL FC FN	SENSITIVITY M 12345678
00	*LANDING GEAR	B	D	DA			01000000
00		B	D	DR			
00	*NORMAL OPERATION	B	DA	DAA	D		01000000
00		B	DA	DAW			
01	*EXTEND LANDING GEAR	B	DAA	DAAA	DA		00000000
02		B	DAA	DAAR	DB		00000000
03	*EXTEND MAIN LANDING GEAR	B	DAAA	RDAAAA	DAA		00000000
04		A	DAAA	LDAAAA			
05	*RMLG FULL DOWN AND LOCKED	B	RDAAAA	RDAAAB	DAAA		00000000
06		B	RDAAAA		M		AAAAAAAA
07	RMLG SHOCK STRUT	R13211	RDAAAAA			A	
08	RMLG SHRINK MECHANISM	R13212	RDAAAAR			S	
09	RMLG DOWN LIMIT SWITCH	R13142	RDAAAAC			1	
10	RMLG UPLOCK ONEWAY RESTRICTR	R13216	RDAAAAD			S	
11	RMLG SIDERRACE ACTUATOR	R13210	RDAAAAE			A	
12	RMLG UPLOCK SEQ VALVE ASSY	R13215	RDAAAAF			A	
13	RMLG UPLK + INBD DR SHT VLVR	R13214	RDAAAAG			A	
14	RMLG UPLOCK MECHANISM	R13217	RDAAAAH			A	
15	RMLG SIDERRC ACT ONEWY RSTR	R1321*	RDAAAAJ			S	
16	RMLG UPLOCK ACTUATOR	R1321*	RDAAAAK			A	
17	RMLG WHEEL + TIRE ASSY	R1325*	RDAAAAL			A	

	TITLE	NUC	ALPHA	INPUT	DEP FUNC	CO AL SENSITIVITY FC FN W 1234567A9
18	RMLG DRAG BEAM PADS	R1320•	RDAAAA[illegible]			5
19	RMLG OUTBOARD DOOR	R13235	RDAAAA[illegible]			5
	RMLG STRUT DOOR	R13234	RDAAAA[illegible]			5
	RMLG SCISSORS SWITCH	R13145	RDAAAA[illegible]			1
22	LANDING GEAR DUMP VALVE	R13195	DAAAAE			1
23	RMLG OUTBD DOOR DRIVE LINK	R13238	RDAAAA[illegible]			4
	•RMLG INBOARD DOOR OPEN	R	RDAAAH	DAAC	[illegible] AAAA	AAAAAAAAA
		R	RDAAAU		[illegible]	AAAAAAAAA
		R	RDAAAB		[illegible] A	AAAAAAAAA
27	RMLG INBD DR ACT ONWY RESTR	R1323•	RDAAAHA			5
28	RMLG UPLK ONEWAY RESTRICTOR	R1321•	RDAAAA[illegible]			5
29	RMLG INBD DOOR MECHANISM	R1323•	RDAAAHR			4
30	RMLG INBD DOOR RELLCRANK	R13232	RDAAAHC			4
31	RMLG INBOARD DOOR	R13236	RDAAAHD			5
32	RMLG UPLK • INBD DR SHT VLV	R1321•	RDAAAAC			4
33	RMLG UPLOCK SEQ VALVE ASSY	R13215	RDAAAAF			4
34	RMLG INBD DOOR ACTUATOR	R1323•	RDAAAHE			4
35	RMLG DOOR CLOSE LIMIT SW	R13141	RDAAAHF			1
	•LMLG FULL DOWN AND LOCKED	R	LDAAAA	LDAAAB	[illegible] AAAA	AAAAAAAAA
		R	LDAAAA		[illegible]	AAAAAAAAA
38	LMLG SHOCK STRUT	R13211	LDAAAAA			4
39	LMLG SHRINK MECHANISM	R13212	LDAAAAP			5
40	LMLG DOWN LIMIT SWITCH	R13142	LDAAAAC			1
41	LMLG UPLOCK ONEWAY RESTRICTR	R1321•	LDAAAA[illegible]			5
42	LMLG SIDEBRACE ACTUATOR	R1312D	LDAAAAE			4
43	LMLG UPLOCK SEQ VALVE ASSY	R13215	LDAAAAF			4
44	LMLG UPLK • INBD DR SHT VLV	R1321•	LDAAAAC			4
45	LMLG UPLOCK MECHANISM	R13217	LDAAAAH			4
46	LMLG SIDEBRC ACT ONEWY RSTR	R1321•	LDAAAAJ			5
47	LMLG UPLOCK ACTUATOR	R1321•	LDAAAAP			4
48	LMLG WHEEL • TIRE ASSY	R13291	LDAAAAL			4
49	LMLG DRAG BEAM PADS	R132••	LDAAAAM			4
50	LMLG OUTBOARD DOOR	R13235	LDAAAAN			5
51	LMLG STRUT DOOR	R13234	LDAAAAP			5
52	LMLG SCISSORS SWITCH	R13C45	LDAAAAQ			1
53	LANDING GEAR DUMP VALVE	R13195	DAAAAR			1
54	LMLG OUTBD DOOR DRIVE LINK	R13238	LDAAAAS			5
	•LMLG INBOARD DOOR OPEN	R	LDAAAB	DAAC	[illegible] AAAA	AAAAAAAAA
		R	LDAAAB		[illegible]	AAAAAAAAA
		R	LDAAAB		[illegible]	AAAAAAAAA
58	LMLG INBD DR ACT ONWY RESTR	R1323•	LDAAAHA			5
59	LMLG UPLK ONEWAY RESTRICTOR	R1321••	LDAAAA[illegible]			5
60	LMLG INBD DOOR MECHANISM	R1323•	LDAAAHR			4
61	LMLG INBD DOOR RELLCRANK	R13232	LDAAABC			4
62	LMLG INBD DOOR	R13236	LDAAABD			5
63	LMLG UPLK • INBD DR SHT VLV	R13214	LDAAAAC			4
64	LMLG UPLOCK SEQ VALVE ASSY	R13215	LDAAAAF			4
65	LMLG INBD DOOR ACTUATOR	R1323•	LDAAABF			4

	TITLE	NUC	ALPHA	INPUT	DEP FUNC	CO AL SENSITIVITY FC FN W 1234567A9
66	LMLG DOOR CLOSE LIMIT SW	R13141	LDAAABF			1
	•EXTEND NOSE LANDING GEAR	R	DAAR	DAARA	DAA	555555555
	•NLG FULL DOWN AND LOCKED	R	DAARA	DAARB	DAAB	AAAAAAAAA
		R	DAARA		[illegible]	AAAAAAAAA
70	NLG DOWN LIMIT SWITCH	R13143	DAARAA			1
71	NLG WHEEL AND TIRE ASSY	R13331	DAABAC			4
72	NLG UPLOCK SEQUENCE VALVE	R13312	DAARAD			4
73	NLG SHOCK STRUT	R13313	DAARAE			4
74	NLG DRAG BRACE ACTUATOR	R1331P	DAARAG			4
76	NLG UPLK • AFT DR SHT VLV	R13326	DAARAH			4
	NLG UPLK ACT ONWY RESTRICTR	R13•••	DAARAJ			5
78	LANDING GEAR DUMP VALVE	R13195	DAAAAR			1
	•NLG AFT DOOR OPEN	R	DAARB	DAAC	DARNB	AAAAAAAAA
		R	DAARB		DAARA	AAAAAAAAA
		R	DAARB		[illegible]	AAAAAAAAA
82	NLG UPLOCK ACTUATOR	R13321	DAARAF			4
83	NLG UPLOCK MECHANISM	R1332•	DAARHA			4
84	NLG UPLK • AFT DR SHT VLV	R13326	DAARAH			4
85	NLG AFT DOOR	R13324	DAAHBA			5
86	NLG FORWARD DOOR	R13328	DAARBC			5
87	NLG UPLOCK RLLLCRANK	R13322	DAARBF			4
	•LANDING GEAR ACTUATION	R	DAAC	DAC	RDAAAR	AAAAAAAAA
		R	DAAC	DRA	LDAAAR	AAAAAAAAA
		R	DAAC		DAABR	AAAAAAAAA
	•HYDRAULIC FLD REG • DIST TO LGR	R	DAC	DAL	DAAC	AAAAAAAAA
		R	DAC	KEA	DARC	AAAAAAAAA
		R	DAC		ABRB	AAAAAAAAA
93	LANDING GEAR SELECTOR VALVE	R1312	DACA			4
	TUBING	R1310•	DACR			4
95	RESTRICTOR VALVE	R13122	DACC			5
	•ELECTRICAL SEQUENCING CNTRLR		DAD	DAE	DAC	555555555
97	LANDING GEAR CIRCUIT BREAKR	R1311•	DADA			4
98	LANDING GEAR CONTROL SWITCH	R13112	DADR			4
99	LANDING GEAR ADV RELAY	R1311•	DADC			4
	•MODE SELECT	R	DAE	KRB	DAD	AAAAAAAAA
41		R	DAE			
42	LANDING GEAR CONTROL HANDLE	R13111	DAEA			4
43	CONTROL HANDLE WARN LITE	R1311•	DAEAA			4
44	LANDING GEAR CONTROL SWITCH	R13112	DADR			4
45	•RETRACT LANDING GEAR	R	DAB	DAHA	DA	010000000
46		R	DAB	DABH		
	•RETRACT MAIN LANDING GEAR	R	DABA	RDABAA	DAR	AAAAAAAAA
48		R	DABA	LDABAA		
	•RMLG INBOARD DOOR CLOSED	R	RDABAA	RDABAB	DARA	AAAAAAAAA
		R	RDABAA		[illegible]	AAAAAAAAA
	RMLG INBD DR ACT ONWY RESTR	R131••	RDABAAA			5
41	RMLG UPLOCK ONEWAY RESTRICTR	R1321•	RDABAAR			5
42	RMLG INBD DOOR MECHANISM	R1323•	RDABAAC			4

	TITLE	WUC	ALPHA	INPUT	DEP FUNC	CD AL SENSITIVITY FC FN M 123456789
B3	RMLG INBD DOOR BELLCRANK	B13232	RDABAAD			A
B4	RMLG INBOARD DOOR	B13236	RDABAAE			5
B5	RMLG UPLK + INBD DR SHT VLV	B13214	RDABAAF			A
B6	RMLG UPLK SEQ VALVE ASSY	B13219	RDABAAG			A
B7	RMLG INBOARD DOOR ACTUATOR	B1323•	RDABAAH			A
B8	RMLG DOOR CLOSE LIMIT SWTCH	B13141	RDABAB•			1
	•RMLG FULL UP	B	RDABAB	RDAAAB	•DAHAA	AAAAAAAAA
		B	RDABAB	DABC	•	AAAAAAAAA
C1	RMLG SHOCK STRUT	B13211	RDABABA			A
C2	RMLG SHRINK MECHANISM	B13212	RDABABB			5
C3	RMLG DOWN LIMIT SWITCH	B13142	RDABABC			1
C4	RMLG UPLK ONEWAY RESTRICTOR	B13216	RDABABD			5
C5	RMLG SIDERRACF ACTUATOR	B1321D	RDABABE			A
C6	RMLG SEQUENCE VALVE ASSY	B13219	RDABABF			A
C7	RMLG UPLK + INBD DR SHT VLV	B13214	RDABABG			A
C8	RMLG UPLOCK MECHANISM	B13217	RDABABH			A
C9	RMLG SIDERRC ACT ONWY RESTR	B1321•	RDABABJ			A
D0	RMLG UPLOCK ACTUATOR	B1321•	RDABABK			5
D1	RMLG WHEEL + TIRE ASSY	B13291	RDABABL			A
D2	RMLG DRAG BEAM PADS	B132••	RDABABM			A
D3	RMLG OUTBOARD DOOR	B13235	RDABABN			5
D4	RMLG STRUT DOOR	B13234	RDABABP			5
D5	RMLG SCISSORS SWITCH	B13145	RDABABQ			5
D7	LANDING GEAR DUMP VALVE	B13155	DABABR			1
D8	RMLG OUTBOARD DR DRIVE LINK	B13237	RDABABS			1
	•LMLG INBOARD DOOR CLOSED	B	LDABAA	LDABAB	DABA	A AAAAAAAAA
		B	LDABAA		M	AAAAAAAAA
E1	LMLG INBD DR ACT ONWY RESTR	B1326•	LDABAAA			5
E2	LMLG UPLK ONEWAY RESTRICTOR	B13216•	LDABAAB			5
E3	LMLG INBD DOOR MECHANISM	B1323•	LDABAAC			A
E4	LMLG INBD DOOR BELLCRANK	B13232	LDABAAD			A
E5	LMLG INBOARD DOOR	B13236	LDABAAE			5
E6	LMLG UPLK + INBD DR SHT VLV	B13214	LDABAAF			A
E7	LMLG UPLK SEQ VALVE ASSY	B13219	LDABAAG			A
E8	LMLG INBOARD ACTUATOR	B1323•	LDABAAH			A
E9	LMLG DOOR CLOSE LIMIT SWTCH	B13141	LDABAAJ			1
	•LMLG FULL UP	B	LDABAB	LDAAAB	LDABAA	A AAAAAAAAA
		B	LDABAB	DABC	M	AAAAAAAAA
F2	LMLG SHOCK STRUT	B13211	LDABABA			A
F3	LMLG SHRINK MECHANISM	B13212	LDABABB			5
F4	LMLG DOWN LIMIT SWITCH	B13142	LDABABC			1
F5	LMLG UPLK ONEWAY RESTRICTOR	B13216•	LDABABD			5
F6	LMLG SIDERRACE ACTUATOR	B13210	LDABABF			A
F7	LMLG SEQUENCE VALVE ASSY	B13219	LDABABF			A
F8	LMLG UPLK + INBD DR SHT VLV	B13214	LDABABG			A
F9	LMLG UPLOCK MECHANISM	B13217	LDABABH			A
G0	LMLG WHEELAND TIRE ASSEMBLY	B13251	LDABABL			A
G1	LMLG DRAG BEAM PADS	B132••	LDABABM			5

	TITLE	WUC	ALPHA	INPUT	DEP FUNC	CD AL SENSITIVITY FC FN M 123456789
G2	LMLG OUTBOARD DOOR	B13235	LDABABN			5
G3	LMLG STRUT DOOR	B13234	LDABABP			5
G4	LMLG SCISSORS SWITCH	B13145	LDABABQ			1
G5	LANDING GEAR DUMP VALVE	B13155	LDABABR			1
G6	OUTBOARD DOOR DRIVE LINK	B13237	LDABABS			A
G7	•RETRACT NOSE LANDING GEAR	B	DABB	DABBA	DAB	010000000
	•NLG AFT DOOR CLOSED	R	DABBA	DABBB	D_BB	AAAAAAAAA
		R	DABBA		M	AAAAAAAAA
H0	NLG UPLOCK ACTUATOR	B13321	DABBAA			A
H1	NLG UPLOCK MECHANISM	B1332•	DABBAB			A
H2	NLG UPLK + AFT DR SHT VALVE	B1332•	DABBAC			A
H3	NLG AFT DOOR	B13324	DABBAD			5
H4	NLG FOWARD DOOR	B13324	DABBAE			5
H5	NLG UPLOCK BELLCHANK	B13322	DABBAH			A
	•NOSE LANDING GEAR FULL UP	B	DABBB	DAABB	DABBA	AAAAAAAAA
		B	DABBB	DABC	M	AAAAAAAAA
H9	NLG DOWN LIMIT SWITCH	B13143	DAABAA			1
J0	NLG WHEEL + TIRE ASSEMBLY	B13331	DAABAC			A
J1	NLG UPLOCK SEQUENCE VALVE	B13312	DAABAD			A
J2	NLG SHOCK STRUT	B13313	DAABAF			A
J3	NLG DRAG BRACE ACTUATOR	B1331P	DAABAF			A
J4	NLG UPLOCK ACTUATOR	B13321	DAABAG			A
J5	NLG UPLK + AFT DR SHT VALVE	B13326	DAABAH			A
	•LANDING GEAR ACTUATION	B	DABC	DAC	HDABAB	AAAAAAAAA
		B	DABC		LDABAB	AAAAAAAAA
		B	DABC		DABBB	AAAAAAAAA
	•CATAPULT LAUNCH OPERATIONS	C	AF	DF		AAAAAAAAA
	•EXTEND NOSE GEAR STRUT	C	DC	DCA	AF	070000000
	•HI PRESS AIR REG + DIST	C	DCA	DCB	DC	AAAAAAAAA
04	NOSE GEAR EXTEND SELECT VLV	C13317	DCAA			A
05	NOSE GEAR SHOCK STRUT	C13313	DAABAF			A
	•HI PRESS AIR SUPPLY	C	DCB	KGA	DCA	AAAAAAAAA
		C	DCB	DAJ		
08	400 CU IN AIR BOTTLE	C49214	DCBA			A
09	CHECK VALVE	C13156	DCBB			5
10	RELIEF VALVE	C1319C	DCBC			5
11	TUBING	C1319•	DCBD			A
	•ELECTRICAL SEQUENCING CONTLC		DCC	DCD	DCB	AAAAAAAAA
13	LEFT MAIN GEAR SCISSORS SW	C13145	DAAAAD			A
14	NOSE GEAR STRUT EXTEND RELY	C1331•	DCCA			A
15	NOSE GEAR STRUT EXTEND SW	C1331•	DCCF			A
	•EMERGENCY OPERATION	C	DA	DAA	•	• DA 000000040
	•EXTEND LANDING GEAR	C	DAA	DAAA	DB	000000040
	•RMLG FULL DOWN AND LOCKED	C	RDAAAA	RDAAAB	DAAA	AAAAAAAAA
		C	RDAAAA		M	AAAAAAAAA
	•RMLG INBOARD DOOR OPEN	C	RDAAAB	DAAC	RDAAAA	AAAAAAAAA
		C	RDAAAB		RDABAB	AAAAAAAAA
		C	RDAAAB		M	AAAAAAAAA

TITLE	WUC	ALPHA	INPUT	DSP FUNC	CD AL SENSITIVITY FC PN M 1234567890
*LMLG FULL DOWN AND LOCKED	C	LDAAAA	LDAAAB	DAAA M	AAAAAAAAAA
*LMLG INBOARD DOOR OPEN	C	LDAAAA	DAAC	LDAAAA M	AAAAAAAAAA
	C	LDAAAB		LDABAB	AAAAAAAAAA
*EXTEND NOSE LANDING GEAR	C	LDAACB			AAAAAAAAAA
*NLG FULL DOWN AND LOCKED	C	DAAB	DAABA	DAA	AAAAAAAAAA
	C	DAABA	DAABB	DAAB M	AAAAAAAAAA
*NLG AFT DOOR OPEN	C	DAABA	DAAC	DABBB	AAAAAAAAAA
	C	DAABB		DAABA M	AAAAAAAAAA
*LANDING GEAR ACTUATION	C	DAABB	DBA	RDAAAR LDAAAB	AAAAAAAAAA
	C	DAAC		DAABB	AAAAAAAAAA
	C	DAAC	DBB	DAAC	AAAAAAAAAA
*HI PRESS AIR REG + DIST	C	DBA			A
37 LG EMER AIR SELECTOR VALVE	C13152	DBAA			A
38 PRESSURE OPERATED DUMP VLV	C13155	DBAB			A
39 TWO WAY RESTRICTOR	C13197	DBAC			A
*HI PRESSURE AIR SUPPLY	C	DBB	KGA	DBA	AAAAAAAAA
CHECK VALVE	C13194	DCBB	DBC		A
42 RELIEF VALVE	C1319C	DCBC			A
43 100 CU IN AIR BOTTLE	C13193	DBBC			A
48 CHECK VALVE	C1319*	DBBD			A
*ELECTRICAL SEQUENCING CNTLC		DBC	DBD	DBB K	AAAAAAAAA
LANDING GEAR CIRCUIT BREAKRC	1311*	DADA			A
LANDING CONTROL SWITCH	C13112	DADB			A
*MODE SELECT	C	DBD	KBB	DBC	AAAAAAAAA
	C	DBD	L		A
LANDING GEAR CONTROL HANDLEC	13111	DBDA			A
LANDING GEAR CIRCUIT BREAKRC	1319*	DADA			

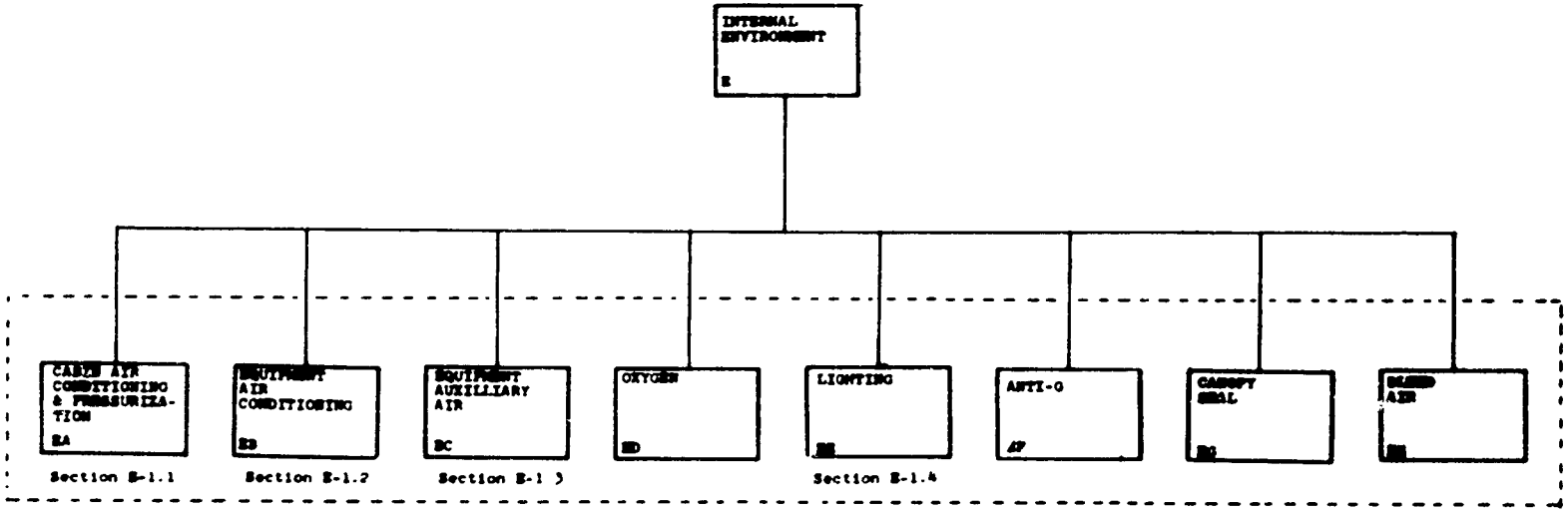

Section E-1

Aircraft: F-4J	
Title: Functional Diagram INTERNAL ENVIRONMENT SECTION	
Document:	rev. date NA
Date:	

Section E

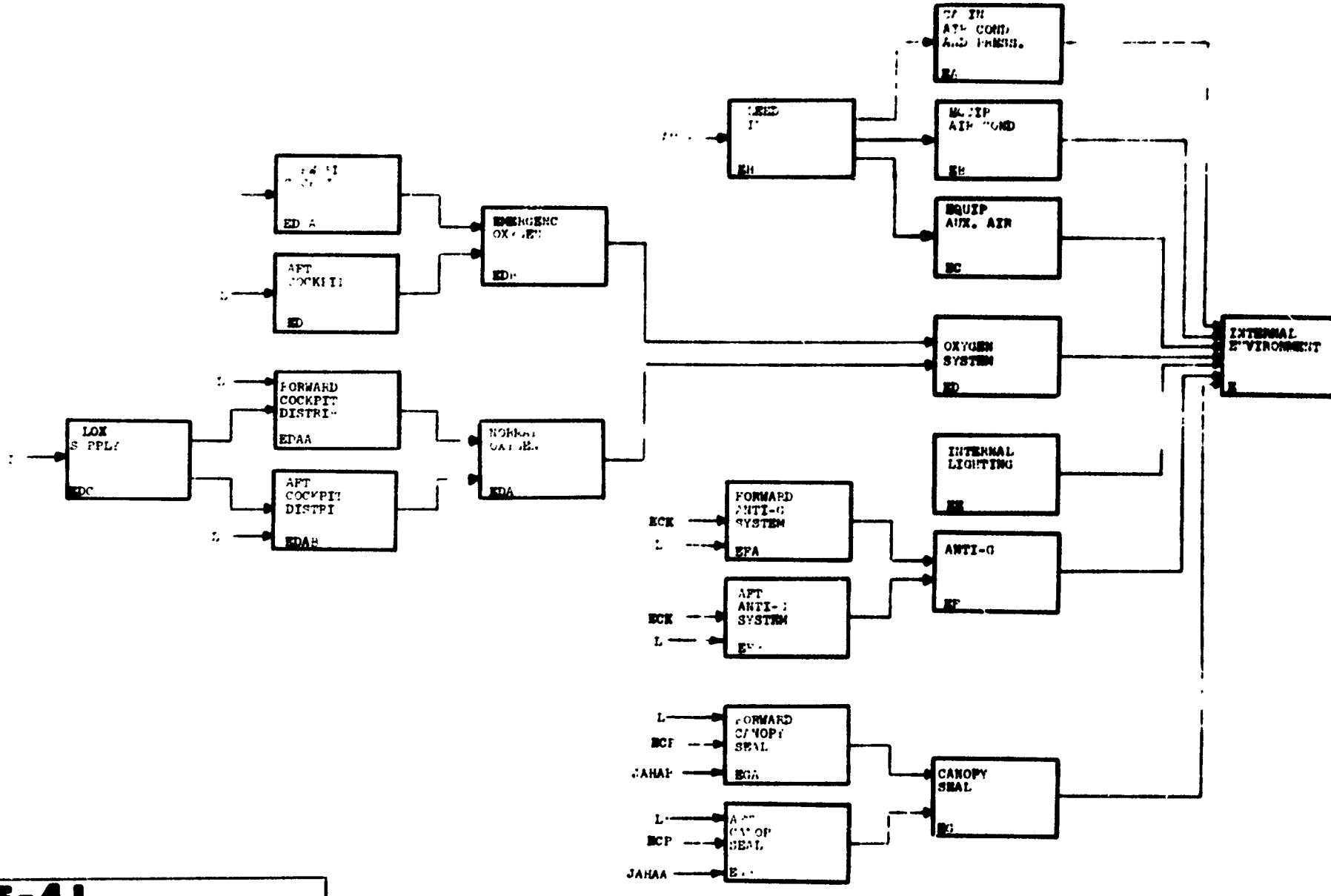

Aircraft: F-4J	
Title: Functional Diagram	
Document:	**rev. date**
Date:	

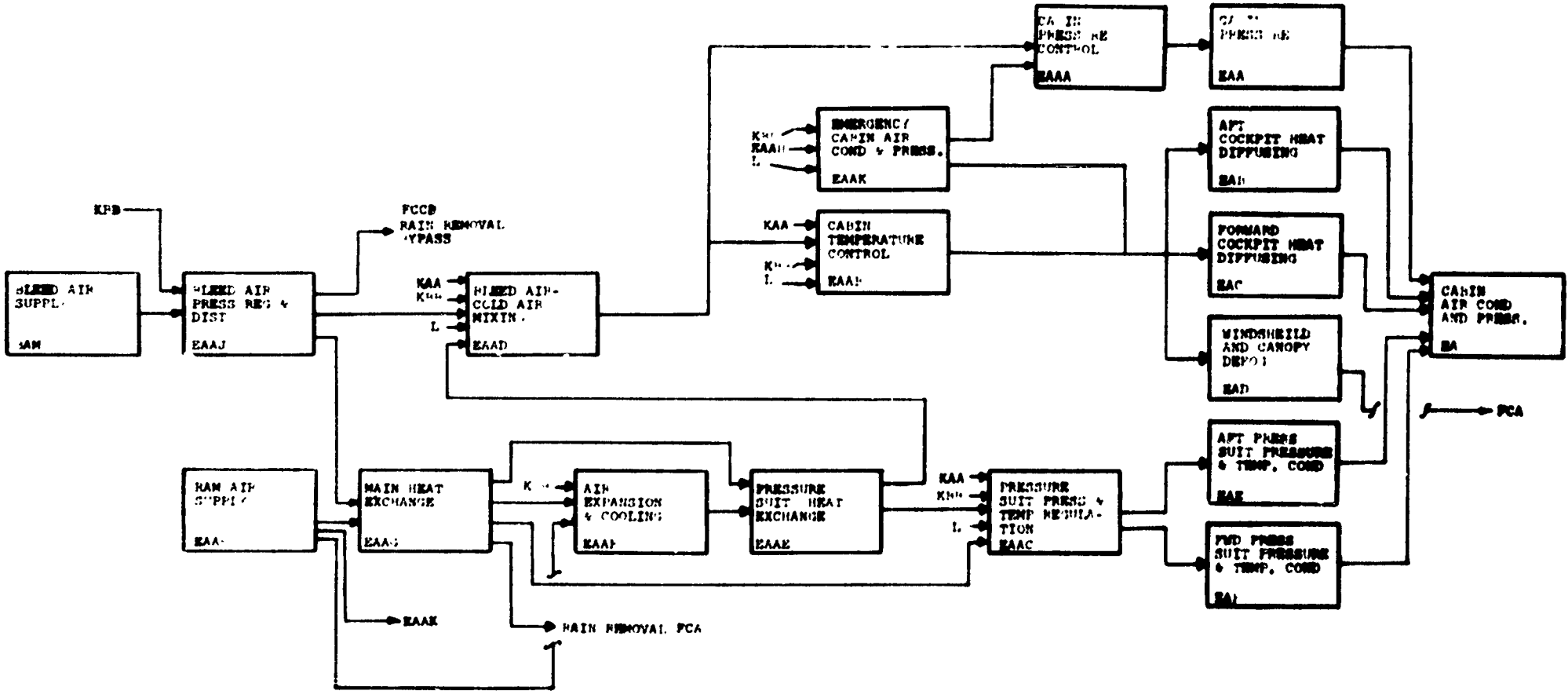

Aircraft: F-4J

Title: Functional Diagram

Document: **rev. date**

Date:

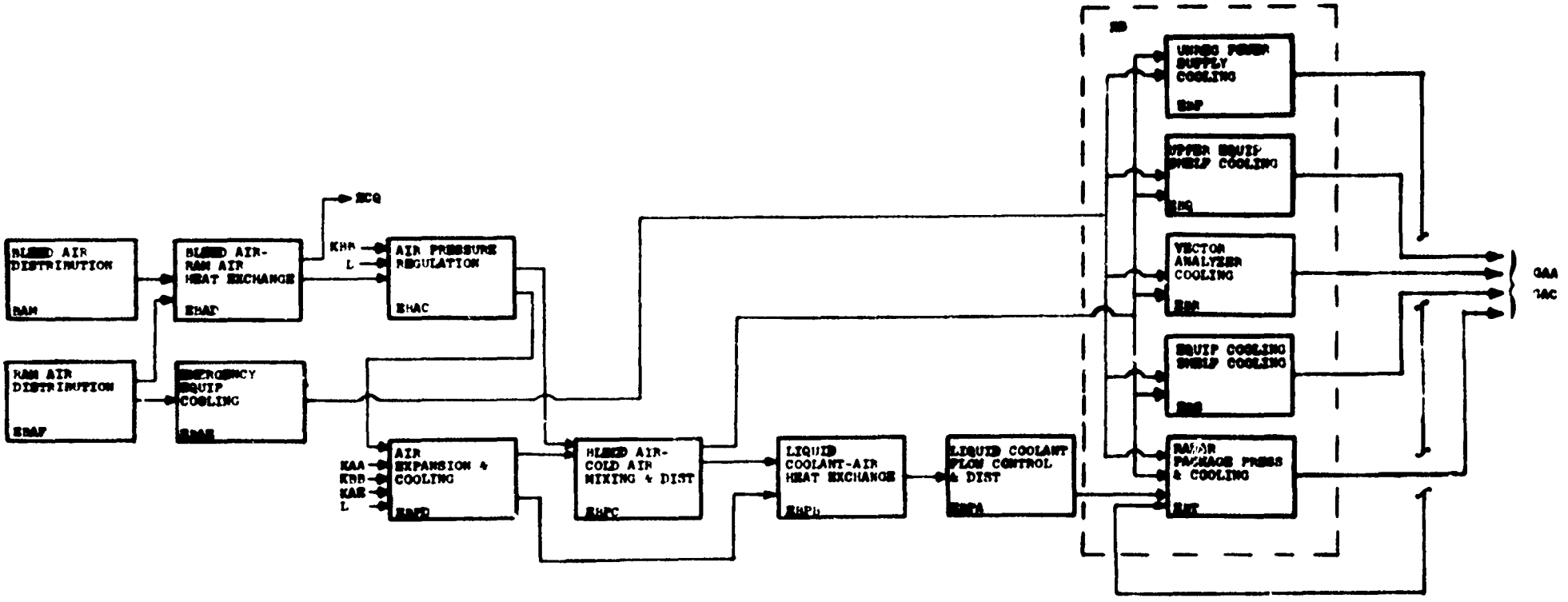

Aircraft: F-4J	
Title: Functional Diagram EQUIPMENT AIRCONDITIONING SYSTEM	
Document:	**rev. date**
Date:	

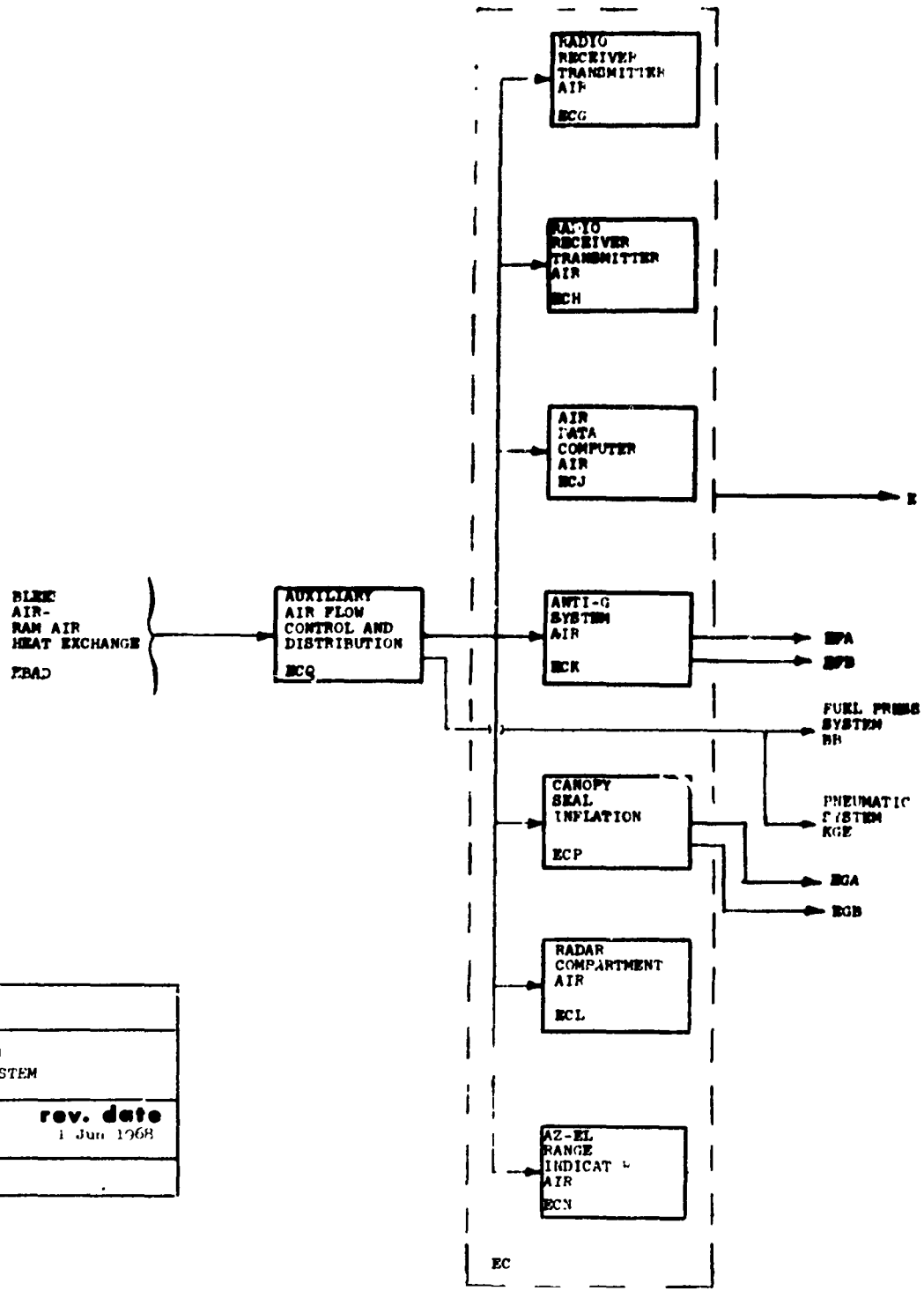

Aircraft: F-4J

Title: Functional Diagram
EQUIPMENT AUXILIARY AIR SYSTEM

Document: NAVAIR 01-245FDF-2-2.
rev. date 1 Jun 1968

Date: 23 Apr 1969
Revised 20 May 1969 ARINC

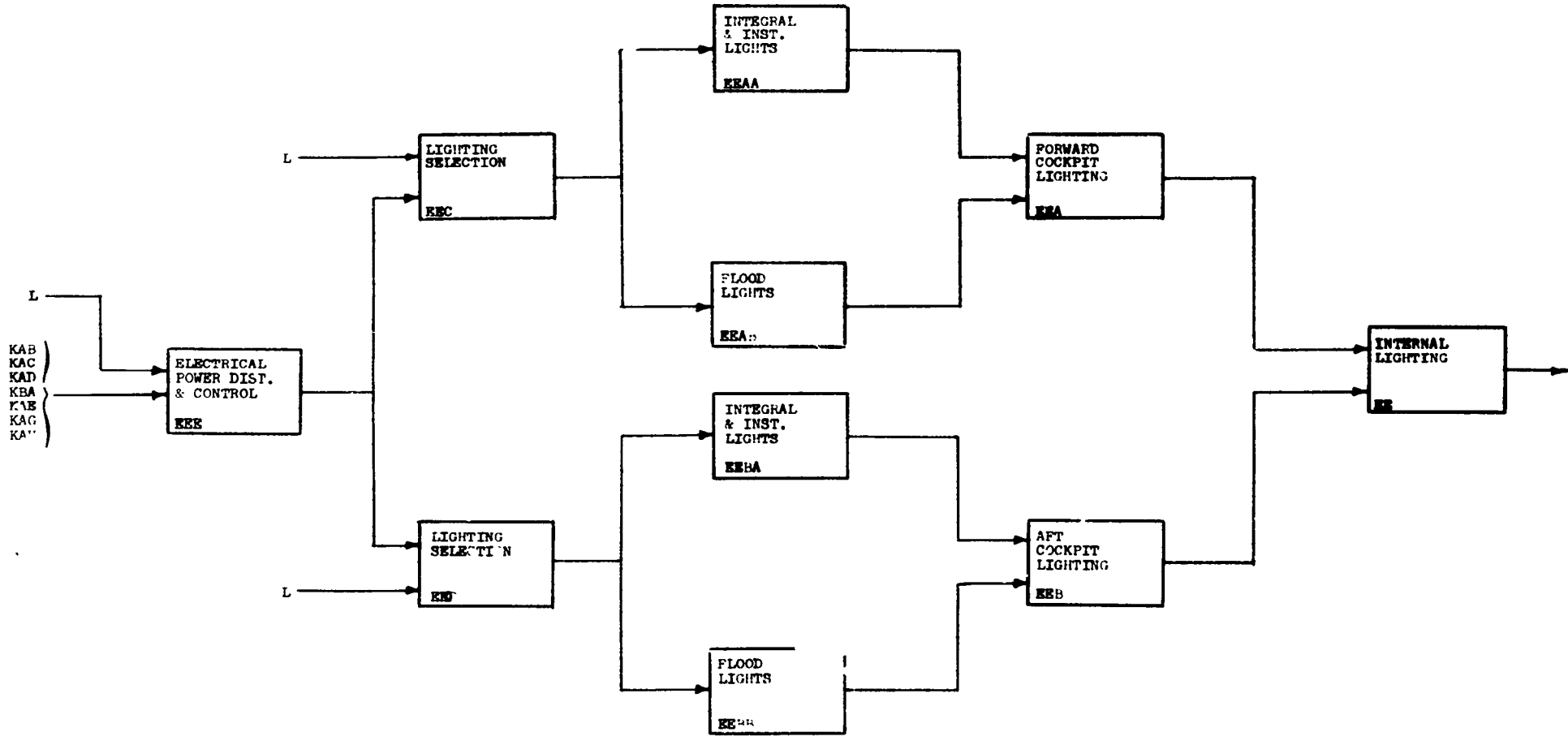

Aircraft: F-4J

Title: Functional Diagram
INTERNAL LIGHTING SYSTEM

Document: NAVAIR [illegible]

rev. date [illegible]

Date: [illegible]

Revised 20 May 1962

ARINC

	TITLE	WUC	ALPHA	INPUT	DEP FUNC	CD AL FC FN	SENSITIVITY W 123456789
00	*INTERNAL ENVIRONMENT	D	E	EA			198AAAA81
00		D	E	EB			
00		D	E	EC			
00		D	E	ED			
00		D	E	EE			
00		D	E	EF			
		D	E	EG			
01	*CABIN AIRCOND AND PRESS	D	EA	EAA	F		003555300
02		D	EA	EAB			
03		D	EA	EAC			
04		D	EA	EAD			
05		D	EA	EAE			
06		D	EA	EAF			
	*CABIN PRESSURIZATION	D	EAA	EAAA	EA		AAAAAAAAA
	*CABIN PRESSURE CONTR	D	EAAA	EAAD	EAA		AAAAAAAAA
09		D	EAAA	EAAK			
10	PNEUMATIC DUMP VALVE	D41211	EAAAA			A	
11	FWD CKPT CABIN PRESS IND	D51118	EAAAB			2	

	TITLE	WUC	ALPHA	INPUT	DEP FUNC	CD AL FC FN	SENSITIVITY W 123456789
12	SCREEN	D4121*	EAAAC			A	
13	CABIN PRESSURE REGULATOR	D41216	EAAAD			A	
14	CHECK VALVE	D4121*	EAAAE			A	
15	TRUE ATMOSPHEREIC PRES HOSE	D4121*	EAAAF			A	
16	CABIN PRESS SAFETY VALVE	D41219	EAAAG			A	
17	AFT CKPT CABIN PRESS IND	D51118	EAAAH			2	
18	BLD AR PRES REG - SHTOF VLV	D4112F	EAAAJ			A	
19	STATIC PRESSURE LINE	D4121*	EAAAK			A	
20	CABIN AIR INLET VALVE	D4111F	EAAAL			A	
	*BLEED AIR-COLD AIR MIXING	D	EAAD	EAAJ	EAAA		AAAAAAAAA
		D	EAAD	EAAE	EAAB		AAAAAAAAA
24		D	EAAD	KAA			
24		D	EAAD	KBB			
24		D	EAAD	L			
25	TEMPERATURE CONTROL PANEL	D4111J	EAADA			A	
26	CABIN MANUAL TEMP LIMITER	D4111R	EAADB			A	
27	CABIN DUAL TEMP MIXING VALV	D41125	EAADC			A	
28	NO 2 CKT BREAKER PANEL	D42152	EAADE			A	
	*BLD AIR PRESS REG + DISTRIB	D	EAAJ	BAM	EAAD		AAAAAAAAA
		D	EAAJ	KBB	EAAC		AAAAAAAAA
		D	EAAJ		FCCB		AAAAAAAAA
31	BLD AR PRES REG + SHTOF VLV	D4112F	EAAJA			A	
32	REGULATED PRESS SENSNG LINE	D4112*	EAAJB			A	
33	AIR DISTRIBUTION DUCT	D41117	EAAJC			A	
34	TOLERANCE COMPENSATOR	D4111W	EAAJD			A	
	*AFT CKPT HEAT DIFFUSING	D	EAB	EAAB	EA		111111111
36		D	EAB	EAAK			
37	FOOT HEAT AND DEFOG VALVE	D4111*	EABA			A	
38	FOOT HEAT-DEFOG CONTROL LVR	D41112	EABB			A	
39	AFT CKPT FOOT HEAT DIFFUSER	D41111	EABC			A	
40	CABIN AIR INLET VALVE	D4111F	EAAAL			A	
	*FWD CKPT HEAT DIFFUSING	D	EAC	EAAB	EA		111111111
42		D	EAC	EAAK			
43	FOOT HEAT AND DEFOG VALVE	D4111*	EABA			A	
44	FOOT HEAT-DEFOG CONTROL LVR	D41112	EACB			A	
45	FWD CKPT FOOT HEAT DIFFUSER	D41111	EACC			A	
46	CABIN AIR INLET VALVE	D4111F	EAAAL			A	
	*WINDSHIELD + CANOPY DEFOG	D	EAD	EAAB	FCA		555555555
48		D	EAD	EAAK			
49	WINDSHIELD CNT PNL DEFG NOZ	D41118	EADA			A	
50	WINDSHEILD SDE PNL DFG DUCT	D4111*	EADB			A	
51	FOOT HEAT-DEFOG VALVE	D4111*	EABA			A	
52	FOOT HEAT-DEFOG CONTROL LVR	D41112	EABB			A	
53	WNDSHLD + CANOPY DEFOG DUCT	D4111*	EADC			A	
54	WINDSHEILD DEFOG MANIFOLD	D4111N	EADD			A	
55	CABIN AIR INLET VALVE	D4111F	EAAAL			A	
56	*AFT PRES SUT PRES/TEMP CONT	D	EAE	EAAC	EA		003555300
57	AFT PRESSURE SUIT	D96112	EAEA			A	

	TITLE	WUC	ALPHA	INPUT	DEP FUNC	CD FC	AL FN	SENSITIVITY W 123456789
98	R1B COMPOSITE DISCONNECT	D41116	EAAB				A	
99	AFT PRESS SUT ARFL SHTOF VLV	D4111L	EAAC				A	
	*PRESS SUIT PRESS/TEMP REG	D	EAAC	EAAE	FAE			AAAAAAAAA
		D	EAAC	EAAG	EAF			AAAAAAAAA
63		D	EAAC	KAA				
64		D	EAAC	KBB				
65		D	EAAC	L				
66	PRESS MANUAL TEMP LIMITER	D4111M	EAACA				A	
67	PRESS SUIT TEMP LIMITER	D4111C	EAACB				A	
68	PRESS SUIT TEMP SENSOR	D4111D	EAACC				A	
69	PRESS SUIT PRESS REGULATOR	D41126	EAACD				A	
70	PRESS SUIT TEMP MIXING VALV	D41124	EAACE				A	
71	CHECK VALVE	D4112*	EAACF				A	
72	PRESS SUIT MANUAL RELAY	D4112*	EAACG				A	
73	FWD CKPT SUIT VENT AIR SELT	D4112*	EAACH				A	
74	AFT CKPT SUIT VENT AIR SELT	D4112*	EAACJ				A	
75	*FWD PRES SUT TEMP/PRES CONT	D	EAF	EAAC	EA			003999300
76	FWD PRESSURE SUIT	D96112	EAFA				A	
77	PILOT COMPOSITE DISCONNECT	D4111U	EAFB				A	
78	FWD PRES SUT ARFL SHTOF VLV	D4111L	EAFC				A	
	*CABIN TEMPERATURE CONTROL	D	EAAB	EAAD	EAB			AAAAAAAAA
		D	EAAB	KAA	EAC			AAAAAAAAA
		D	EAAB	KBB	EAD			AAAAAAAAA
82		D	EAAB	L				
83	TEMPERATURE CONTROL PANEL	D4111J	EAABA				A	
84	AUTO-MANUAL CONTROL SWITCH	D4111M	EAABB				A	
85	TEMPERATURE CONTROL KNOB	D4111*	EAABC				A	
86	MAGNETIC AMPLIFIER	D41113	EAABD				A	
87	CABIN TEMPERATURE SENSOR	D41119	EAABE				A	
88	CABIN MANUAL TEMP SENSOR	D4111R	EAABF				A	
89	TEMP CONTROL RHEOSTAT	D4111B	EAABG				A	
90	NO 2 CKT BREAKER PANEL	D42192	EAADE				A	
	*EMERG CABIN AIR COND + PRES	D	EAAK	L	EAAA	K	EAAJ	006AAA600
		D	EAAK	KBB	EAB	K	EAAJ	006AAA600
		D	EAAK	EAAH	EAC	K	EAAJ	006AAA600
		D	EAAK		FAD	K	EAAJ	006AAA600
93	EMERGENCY VENT CONTROL	D41213	EAAKA				A	
94	DUCTING	D41117	EAAKB				A	
95	*PRESSURE SUIT HEAT EXCHANGE	D	EAAE	EAAG	EAAD			003999300
		D	EAAE	EAAF	EAAC			003999300
97	PRESS SUIT HEAT EXCHANGER	D4112C	EAAEA				A	
	*AIR EXPANSION AND COOLING	D	EAAF	EAAH	EAAE			003999300
		D	EAAF	EAAG				
99		D	EAAF	KHB				
A0	TURBINE OVERSPEED SWITCH	D41123	EAAFA				A	
A1	CABIN MIXING VALVE	D41125	EAAFB				A	
A2	CABIN TURBINE OVERSPEED IND	D4112*	EAAFC				1	
A3	COOLING TURBINE	D4112B	EAAFD				A	

	TITLE	WUC	ALPHA	INPUT	DEP FUNC	CD FC	AL FN	SENSITIVITY W 123456789
	*MAIN HEAT EXCHANGE	D	EAAG	EAAJ	EAAE			AAAAAAAAA
		D	EAAG	EAAH	EAAC			000000000
		D	EAAG		EAAF			AAAAAAAAA
		D	EAAG		FCA			AAAAAAAAA
A6	CABIN AIR OUTLET DUCT	D41128	EAAGA				A	
A7	RAM AIR SCOOP	D4111P	EAAGB				A	
A8	CABIN HEAT EXCHANGER	D4112D	EAAGC				A	
A9	HEAT EXCHANGER DRAIN VALVE	D4112*	EAAGD				A	
B0	RAM AIR OUTLET DUCT	D4111K	EAAGE				A	
B1	GROUND COOLING SHUTOFF VLV	D41127	EAAGF				A	
B2	RUPTURE DISC	D4112E	EAAGG				A	
B3	RAM AIR SCOOP	D4111P	EAAGH				A	
B4	RAM AIR DIFFUSER	D4111Q	EAAGJ				A	
B5	LANDING GEAR HANDLE SWITCH	D13112	DADB				A	
B6	LANDING GEAR AUX RELAY	D1311*	DADC				A	
	*RAM AIR SUPPLY	D	EAAH		EAAG			AAAAAAAAA
		D	EAAH		EAAK			AAAAAAAAA
		D	EAAH		EAAF			AAAAAAAAA
	*EQUIPMENT AIRCONDITIONING	E	EB	EBP	E		EBAE	555555555
01		E	EB	EBQ				
01		E	EB	EBR				
01		E	EB	EBS				
		E	EB	EBT				
	AIR PRESSURE REGULATION	E	EBAC	EBAD	EBPD			AAAAAAAAA
		E	EBAC	KBB	EBPC			AAAAAAAAA
65		E	EBAC	L				
66	OVERPRESSURE RELIEF VLV	E4113*	EBACA				A	
67	RAM AIR CHECK VALVE	E41144	EBACB				A	
68	RAM AIR SHUTOFF VALVE	E41145	EBACC				A	
69	REGULATOR SENSING LINE	E4114*	EBACD				A	
70	PRESS REG + SHTOF VLV 30L	F41133	EBACE				A	
	*BLEED AIR-RAM AIR HEAT EXCHE	E	EBAD	EBAF	EBAC			AAAAAAAAA
		E	EBAD	BAM	ECQ			AAAAAAAAA
72	HEAT EXCHANGER	E4114E	EBADA				A	
73	HEAT EXCHANGER MOUNT BRACKT	E4114*	EBADB				A	
74	BLEED AIR INLET DUCT	E41134	EBADC				A	
75	BLEED AIR OUTLET DUCT	E4113*	EBAD				A	
	*UNREG POWER SUPPLY COOLING	E	EBP	EBPC	EBT			AAAAAAAAA
		E	EBP	EBAE				
	*BLD AIR-COLD AIR MIX + DISTE	E	EBPC	EBPD	EBPB			AAAAAAAAA
		E	EBPC	EBAC	EBP			555555555
		E	EBPC		EBQ			555555555
		E	EBPC		EBR			555555555
		E	EBPC		EBS			555555555
		E	EBPC		EBT			555555555
04	TEMPERATURE SENSOR	E41142	EBPCA				A	
05	TEMPERATURE LIMITER	E41143	EBPCB				A	
06	REBET LATCH	E4114*	EBPCC				A	

	TITLE	WUC	ALPHA	INPUT	DEP FUNC	CD AL FC FN	SENSITIVITY M 1234567A9
07	TEMPERATURE CONTROL ASSY	E41132	EBPCD				A
08	RESET SWITCH	E4114•	EBPCE				A
09	ALTITUDE PRESSURE SWITCH	E41137	EBPCF				A
10	FWD COCKPIT CAUTION LIGHT	E4114•	EBPCG				2
11	AFT COCKPIT CAUTION LIGHT	E4114•	EBPCH				2
12	DUCTING	E41134	EBPCJ				A
13	PRESS REG AND SHTOFF VLV	E4114A	EBPCK				A
	•AIR EXPANSION AND COOLING	E	ECPD	EBAC	FBPC		AAAAAAAAA
		E	ECPD	KAA	FBPB		AAAAAAAAA
14		E	EBPD	KAB			
14		E	EBPD	L			
14		E	EBPD	KAE			
15	TURBINE ASSEMBLY	E4114D	EBPDA				A
16	TURBINE MOUNTING BRACKETS	E4114•	EBPDB				A
17	TURBINE BYPASS VALVE	E41148	EBPDC				A
18	TURBINE INLET DUCT	E41141	EBPDD				A
19	GRND COOL EJECTOR SHTOF VLVE	41147	EBPDE				A
20	TEMPERATURE CONTROL ASSY	E41132	EBPCD				A
21	LANDING GEAR HANDLE SWITCH	E13112	DADA				A
22	LANDING GEAR AUX RELAY	E1311•	DADC				A
23	RMLG SCISSORS SWITCH	E13145	DAAAAD				A
24	NOSE GEAR LIMIT SWITCH	E13144	DAABAB				A
	•UPPER EQUIP SHELF COOLING	E	EBB	EBPC	GAA		012333210
		E	EBB	EBAE	GAC		012333210
	•VECTOR ANALYZER COOLING	E	EBR	EBPC	GAA		012333210
		E	EBR	EBAE	GAC		012333210
	•EQUIP COOLING SHELF COOLINGE		EBS	EBPC	GAA		012333210
		E	EBS	EBAE	GAC		012333210
	•RADR PKG PRESS AND COOLING	E	EBT	EBP	GAA		012331210
		E	EBT	EBPA	GAC		012331210
		E	EBT	EBPC			
30	•LIQ COOLNT FLW CONTL + DISTE		EBPA	EBPA	EBT		AAAAAAAAA
31	RADAR COOLANT PUMP	F41711	EBPAA				A
32	AUXILIARY RESERVOIR	E41713	EBPAB				A
33	OVBD EXPAN RELIEF VALVE	E4171•	EBPAC				A
34	BLEED VALVE	E4121•	EBPAD				A
35	PRESSURE GAGE	E4121•	EBPAE				1
36	ACCUMULATOR	E4121•	EBPAF	06			A
37	LIQUID COOLANT DIST DUCTS	E4121•	EBPAG				A
38	PRESS RELIEF VALVE	E4121•	EBPAH				A
39	SOLENOID VALVE	E4121•	EBPAJ				A
40	FILTER	E4121•	EBPAK				A
41	RESERVIOR	E4121•	EBPAL				A
42	TEMPERATURE GAGE	E4121•	EBPAM				1
44	PRESSURE REGULATOR	E41221	EBPAN				A
45	NO 1 MISC RELAY PANEL	E42111	EBPAP				A
46	RADAR COOLANT PUMP CHECK SWE	4171•	EBPAQ				A
47	HEAT EXCHANGER RELAY	E4171•	EBPAR				A

	TITLE	WUC	ALPHA	INPUT	DEP FUNC	CD AL FC FN	SENSITIVITY M 1234567A9
48	TEMPERATURE CONTROL ASSY	F41135	EBPCD				A
	•LIQ COOLANT/AIR HEAT EXCH	E	EBPB	EBPD	EBPA		AAAAAAAAA
		E	EBPB	EBPC			
52	COOLANT/AIR HEAT EXCHANGER	E41712	EBPBA				A
53	AUX COOLANT/AIR HEAT EXCHGRE	4171•	EBPBB				A
54	TEMPERATURE CONTROL ASSY	E41135	EBPCD				A
55	BLEED VALVE	E4171•	EBPCE				A
56	TEMPERATURE GAGE	E4171•	EBPCF				1
57	HEAT EXCHANGER RELAY	F4171•	EBPCG				A
58	SOLENOID	F4171•	EBPCH				A
	•EQUIP EMERGENCY COOLING	E	EBAE	EBAF	EBP	K EB	AAAAAAAAA
		E	EBAE		EBQ		AAAAAAAAA
		E	EBAE		FBR		AAAAAAAAA
		E	EBAE		FBS		AAAAAAAAA
		E	EBAE		FBT		AAAAAAAAA
61	RAM AIR SHUTOFF VALVE	F41145	EBAEA				A
62	DUCTING	E4114•	EBAEB				A
00	•EQUIPMENT AUXILIARY AIR	F	EC	ECP	E		222222222
00		F	EC	ECQ			
00		F	EC	ECH			
00		F	EC	ECJ			
00		F	EC	ECL			
00		F	EC	ECN			
		F	EC	ECK			
	•RADIO RCVR-TRANSMITTER AIR	F	ECG	ECQ	EC		AAAAAAAAA
02	CHEMICAL DRIER	F4115A	ECAA				A
03	CHECK VALVE	F4115•	ECAB				A
04	ABSOLUTE PRESS RELIEF VALVE	F41153	ECAC				A
05	ABSOLUTE PRESS REGULATOR	F41152	ECAD				A
06	TWO-WAY RESTRICTOR	F4115•	ECAE				A
07	FILTER	F4115•	ECAF				A
	•RADIO RCVR-TRANSMITTER AIR	F	ECH	ECQ	FC		AAAAAAAAA
09	CHEMICAL DRIER	F4115A	ECAA				A
10	CHECK VALVE	F4115•	ECAB				A
11	ABSOLUTE PRESS RELIEF VALVE	F41153	ECAC				A
12	ABSOLUTE PRESS REGULATOR	F41152	ECAD				A
13	TWO-WAY RESTRICTOR	F4115•	ECAE				A
11	FILTER	F4115•	ECAF				A
	•AIR DATA COMPUTER AIR	F	ECJ	ECQ	FC		AAAAAAAAA
		F	ECJ		CF		AAAAAAAAA
16	FILTER	F4115•	ECJA				A
17	WATER TRAP	F4115•	ECJB				A
18	TEST FITTING	F4115•	ECJC				A
	•ANTI-G SYSTEM AIR	F	ECK	ECQ	EC	F	AAAAAAAAA
		F	ECK		EFA		AAAAAAAAA
		F	ECK		FFB		AAAAAAAAA
	•RADAR COMPARTMENT AIR	F	ECL	ECQ	FC		AAAAAAAAA
21	DEHYDRATOR DESICCANT	F4115•	ECLB				A

	TITLE	WUC	ALPHA	INPUT	DEP FUNC	CD FC	AL FN	SENSITIVITY M 123456789
22	CHECK VALVE	F41190	ECAB					A
23	ABSOLUTE PRESS RELIEF VALVE	F41193	ECAC					A
24	ABSOLUTE PRESSURE REGULATOR	F41192	ECAD					A
25	TWO-WAY RESTRICTOR	F41190	ECAE					A
26	FILTER	F41190	ECAF					A
	*AFT CKPT AK-EL RAN IND AIR	F	ECN	ECJ	EC			AAAAAAAAA
28	CHEMICAL DRIER	F41190	ECAA					A
29	CHECK VALVE	F41190	ECAB					A
30	ABSOLUTE PRESS RELIEF VALVE	F41193	ECAD					A
31	ABSOLUTE PRESSURE REGULATOR	F41192	ECAE					A
32	TWO-WAY RESTRICTOR	F41190	ECAF					A
33	FILTER	F41190	ECAG					A
	CANOPY SEAL INFLATION	F	ECP	ECJ	EC			AAAAAAAAA
		F	ECP		EGA			AAAAAAAAA
		F	ECP		EGB			AAAAAAAAA
36	FILTER	F41190	ECPA					A
37	CHECK VALVE	F41190	ECPB					A
	AUX AIR DISTRIBUTION	F	EC0	ERAD	ECP			AAAAAAAAA
		F	EC0		ECG			AAAAAAAAA
		F	EC0		ECH			AAAAAAAAA
		F	EC0		ECJ			AAAAAAAAA
		F	EC0		ECK			AAAAAAAAA
		F	EC0		ECL			AAAAAAAAA
		F	EC0		ECN			AAAAAAAAA
		F	EC0		RBD			AAAAAAAAA
		F	EC0		BBM			AAAAAAAAA
		F	EC0		BBJ			AAAAAAAAA
		F	EC0		KGE			AAAAAAAAA
39	DUCTING	F41190	EC0A					A
40	FITTINGS	F41190	EC0B					A
	*OXYGEN SYSTEM	G	ED	EDA	E			00AAAAA00
02		G	ED	EDB				
04	*NORMAL SYSTEM	G	EDA	EDAA	ED			003999300
05		G	EDA	EDAB				
06	*FWD COCKPIT DISTRIBUTION	G	EDAA	EDC	EDA			003999300
07		G	EDAA	L				
08	LOX QUANTITY INDICATOR	G51891	EDAAA					A
09	PRESS SUIT LOX VALVE	G47212	EDAAB					A
10	LOW WARNING LIGHT	G47213	EDAAC					A
11	DILUTER DEMAND REGULATOR	G47214	EDAAD					A
12	LOX FLEXIBLE HOSE	G47215	EDAAE					A
13	LOWER DISCONNECT BLOCK	G47216	EDAAF					A
14	LOWER DISCONNECT	G47217	EDAAG					A
15	LOX VALVE	G47218	EDAAH					A
16	COMPOSITE DISCONNECT	G47210	EDAAJ					A
17	LOX REPEATER AMPLIFIER	G4721E	EDAAK					A
18	PRIMARY AMPLIFIER	G4721F	EDAAL					A
19	LOX GAGE	G51892	EDAAM					1

	TITLE	WUC	ALPHA	INPUT	DEP FUNC	CD FC	AL FN	SENSITIVITY M 123456789
20	LOX PRESSURE GAGE	G51893	EDAAN					A
21	PRESSURE REDUCER	G4721L	EDAAP					A
22	LOX REGULATOR	G4721N	EDAAQ					A
23	REGULATOR PANEL	G47210	EDAAR					A
24	INTERMEDIATE BLOCK	G4721R	EDAAS					A
25	UPPER BLOCK	G4721S	EDAAT					A
26	MASTER QUANTITY AMPLIFIER	G51894	EDAAU					A
27	SUPPLY PRESS INDICATOR	G51895	EDAAV					A
28	*AFT COCKPIT DISTRIBUTION	G	EDAB	EDC	EDA			003999300
		G	EDAB	L				
29	LOX QUANTITY INDICATOR	G51891	EDABA					A
36	LOX VALVE	G4721A	EDABH					A
37	COMPOSITE DISCONNECT	G4721C	EDABJ					A
38	LOX REPEATER AMPLIFIER	G4721E	EDABK					A
39	PRIMARY AMPLIFIER	G4721F	EDABL					A
40	LOX GAGE	G51892	EDABM					1
	LOX PRESSURE GAGE	G51893	EDABN					A
42	PRESSURE REDUCER	G4721L	EDABP					A
43	LOX REGULATOR	G4721N	EDABQ					A
44	REGULATOR PANEL	G47210	EDABR					A
45	INTERMEDIATE BLOCK	G4721R	EDABS					A
46	UPPER BLOCK	G4721S	EDABT					A
47	MASTER QUANTITY AMPLIFIER	G51894	EDABU					A
48	SUPPLY PRESSURE INDICATOR	G51895	EDABV					A
	*OXYGEN SUPPLY (LOX)	G	EDC	L	EDAA			AAAAAAAAA
		G	EDC		EDAB			AAAAAAAAA
51	LOX CONVERTER	G47111	EDCA					A
52	LOX CONTAINER	G47112	EDCB					A
53	FILL-B/U VENT VALVE	G47113	EDCC					A
54	RELIEF VALVE	G47114	EDCD					A
55	CHECK VALVE	G4711K	EDCE					A
56	PRESS OPEN/CLOSE VALVE	G47116	EDCF					A
57	CAPACITANCE PROBE	G47117	EDCG					A
58	WARM-UP PLATE	G47118	EDCH					A
59	LOX FILLER VALVE	G4711F	EDCJ					A
60	PREAMPLIFIER	G4711H	EDCK					A
61	MOUNT	G4711J	EDCL					A
	*EMERGENCY SYSTEM	G	EDB	EDBA	ED	*	EDA	00AAAAA00
63		G	EDB	EDBB				
64	*FOWARD COCKPIT	G	EDBA	L	EDB			00AAAAA00
65	EMERG OXYGEN CYLINDER	G47221	EDBAA					A
66	PRESSURE GAGE	G47222	EDBAB					A
67	EMERGENCY OXYGEN REGULATOR	G47223	EDBAC					A
	EMERGENCY CONTROLLER	G47224	EDBAD					A
69	ANTI-SUFFOCATION VALVE	G47225	EDBAE					A
70	CONTROL VALVE	G47226	EDBAF					A
71	RESET LEVER	G47227	EDBAG					A
72	*AFT COCKPIT	G	EDBB	L	EDB			00AAAAA00

	TITLE	WUC	ALPHA	INPUT	DEP FUNC	CD FC	AL FN	SENSITIVITY M 12345A789
73	EMERGENCY OXYGEN CYLINDER	G47221	EDBBA				A	
74	PRESSURE GAGE	G47222	EDBBB				A	
75	EMERGENCY OXYGEN REGULATOR	G47223	EDBBC				A	
30	PRESS SUIT LOX VALVE	G47212	EDARB				A	
31	LOW WARNING LIGHT	G47213	EDARC				A	
32	DILUTER DEMAND REGULATOR	G47214	EDARD				A	
33	LOX FLEXIBLE HOSE	G47215	EDARE				A	
34	LOWER DISCONNECT BLOCK	G47216	EDARF				A	
35	LOWER DISCONNECT	G47217	EDARG				A	
76	EMERGENCY CONTROLLER	G47224	EDBBD				A	
77	ANTI-SUFFOCATION VALVE	G47225	EDBBE				A	
78	CONTROL VALVE	G4722R	EDBBF				A	
79	RESET LEVER	G47227	EDBBG				A	
	*INTERNAL LIGHTING	M	EE	EEA	E	D		022222220
02		M	EE	EEB				
03	*FWD COCKPIT LIGHTING	M	EEA	EEAA	EE			AAAAAAAAA
04		M	EFA	EEAB				
	*INTEGRAL + INST LIGHTS	M	EEAA	EFL	EEA			555555555
06	VERTICAL CAUTION PANEL	M44111	EEAAA				A	
07	COCKPIT CONTROL PANEL	M44112	EEAAB				A	
08	MASTER CAUTION LIGHT	M44117	EEAAC				A	
09	CAUTION TEST CONTROL UNIT	M4411A	EEAAD				A	
10	WHEELS WARNING	M44118	EEAAE				A	
11	CAUTION LITE RELAY PANEL	M4411C	EEAAF				A	
12	INDEXER LITE CONTROL PANEL	M4411D	EEAAG				A	
13	STANDBY COMPASS LIGHT	M4411F	EEAAH				A	
14	INSTRU PANEL EDGE LIGHT	M4411G	EEAAJ				A	
15	RELAY PANEL TEST LIGHTS	M4411H	EEAAK				A	
16	MISSILE STATUS PANEL	M4411J	EFAAL				A	
17	PILOT EJECTION LIGHT/SWITCH	M4411L	EEAAM				/	
18	WARNING LIGHT RELAY PANEL	M4411P	EEAAN				A	
19	MASTER CAUTION RESET SWITCH	M4411E	EEAAP				A	
	*FLOOD LIGHTS	M	EEAB	EEC	EEA			555555555
21	EMERGENCY FLOOD PANEL	M44113	EEABA				A	
22	RED CONTROL FLOOD LIGHT	M44114	EEABB				A	
23	RED INST FLOODLIGHT	M44115	EEABC				A	
24	UTILITY SPOT LIGHT	M44116	EEABD				A	
25	HEAD-FLOOD LIGHT ASSY	M44118	EEABE				A	
26	COCKPIT FLOODLIGHTS	M4411M	EEABF				A	
27	COCKPIT EMERG FLOODLIGHTS	M4411N	EEABG				A	
28	*AFT COCKPIT LIGHTING	M	EFB	EEBA	EE			AAAAAAAAA
29		M	EEB	EEBB				
	*INTEGRAL + INST LIGHTS	M	EEBA	EFD	EEB			555555555
31	COCKPIT INST LIGHT PANEL	M44121	EEBAA				A	
32	RADAR SCREEN WARN LIGHT	M44126	EEBAB				A	
33	EJECT WARNING LIGHT	M44127	EEBAC				A	
34	WARNING LIGHT ASSY	M44128	EEBAD				A	
35	TELELIGHT AFT PANEL	M4412A	EEBAE				A	

	TITLE	WUC	ALPHA	INPUT	DEP FUNC	CD FC	AL FN	SENSITIVITY M 12345A789
36	VERT CAUTION PANEL	M44111	EEBAF				A	
37	INST PANEL EDGE LIGHT	M4411G	EEBAG				A	
	*FLOOD LIGHTS	M	EEBB	EED	EEB			111111111
39	RED CONTROL FLOODLIGHT	M44114	EEBBA				A	
40	RED INST FLOODLIGHT	M44115	EEBBB				A	
41	UTILITY SPOT LIGHT	M44116	EEBBC				A	
42	HEAD-FLOOD LIGHT	M44118	EEBBD				A	
43	EMERGENCY FLOODLIGHT	M4411N	EEBBE				A	
44	*LIGHTING SELECTION	M	EEC	EEE	EEAA			AAAAAAAAA
45		M	EEC	L	EEAB			AAAAAAAAA
46	COCKPIT LIGHTS CONTROL PNL	M44112	EECA				A	
47	LIGHTING SELECTION	M	EED	EEE	EEBA			AAAAAAAAA
		M	EED	L	EEBB			AAAAAAAAA
48	COCKPIT LIGHTS CONTROL PNEL	M44112	EEDB				A	
49	*ELECTRICAL PWR DIST + CONTL	M	EEE	KAB	EEC			AAAAAAAAA
		M	EEE	KAC	EED			AAAAAAAAA
51		M	EEE	KAD				
52		M	EEE	KBA				
53		M	EEE	KAE				
54		M	EEE	KAG				
55		M	EEE	KAH				
56		M	EEE	L				
	NO 2 CKBR PANEL	M42152	EEEA				A	
58	INTEGRAL LITES AUTOTRANSFOR	M4411*	EEER				A	
59	WIRING	M4411*	EEEE				A	
	*ANTI-G SYSTEM	I	EF	EFA	E			001111100
01		I	EF	L				
		I	EF	EFH				
	*FWD ANTI-G SYSTEM	I	EFA	CCK	FF			005555500
		I	EFA	L				
	FWD ANTI-G SUIT	196111	EFAA				A	
	FWD ANTI-G VALVE	141411	EFAH				A	
	FWD COMPOSITE DISCONNECT	14111U	EAFA				A	
	FWD G-SUIT RELIEF VALVE	14141*	EFAD				A	
	FWD G-SUIT EXHAUST PORT	14141*	EFAE				A	
	FWD MANUAL INFLATION BOTTON	14141*	EFAF				A	
	*AFT ANTI-G SYSTEM	I	EFB	ECK	EF			005555500
		I	EFB	L				
	AFT ANTI-G SUIT	196111	EFBA				A	
	AFT ANTI-G VALVE	141411	EFBB				A	
	AFT COMPOSITE DISCONNECT	14111G	EAEB				A	
	AFT G-SUIT RELIEF VALVE	14141*	EFBD				A	
	ANT G-SUIT EXHAUST PORT	14141*	EFBE				A	
	AFT MANUL INFLATION BUTTON	14141*	EFBF				A	

	TITLE	WUC	ALPHA	INPUT	DEP FUNC	CD FC	AL FN	SENSITIVITY M 123456789
	CANOPY SEAL	0	EG	EGA	E			001222100
02		0	EG	EGA				
03+	FOWARD CANOPY SEAL	0	EGA	ECP	EG			00AAAAA00
		0	EGA	L				
		0	EGA	JAMAB				
04	FILTER	041210	EGAA				A	
07	CHECK VALVE	041210	EGAB				A	
08	PRESSURE REGULATOR	041210	EGAC				A	
09	CANOPY SEAL BELLOWS	041210	EGAD				A	
10	FOWARD CANOPY SEAL	041210	EGAE				A	
11+	AFT CANOPY SEAL	0	EGB	ECP	EG			00AAAAA00
12		0	EGB	JAMAA				
13		0	EGB	L				
14	FILTER	041210	EGBA				A	
15	CHECK VALVE	041210	EGBB				A	
16	PRESSURE REGULATOR	041210	EGBC				A	
17	CANOPY SEAL BELLOWS	041210	EGBD				A	
18	AFT CANOPY SEAL	041210	EGBE				A	
19+	BLEED AIR	0	EH	BAH	FA			999999999
		0	EH		ED			996999995
		0	EH		EC			999999999
22	DUCTING	041231	EHA				A	
23	THERMAL COMPENSATOR	041234	EHB				A	
24	TOTAL TEMP COMPENSATOR	041235	EHC				A	
25	CHECK VALVE	041238	EHD				A	
26	MATIC BLEED CONTROLLER	041238	EHE				A	

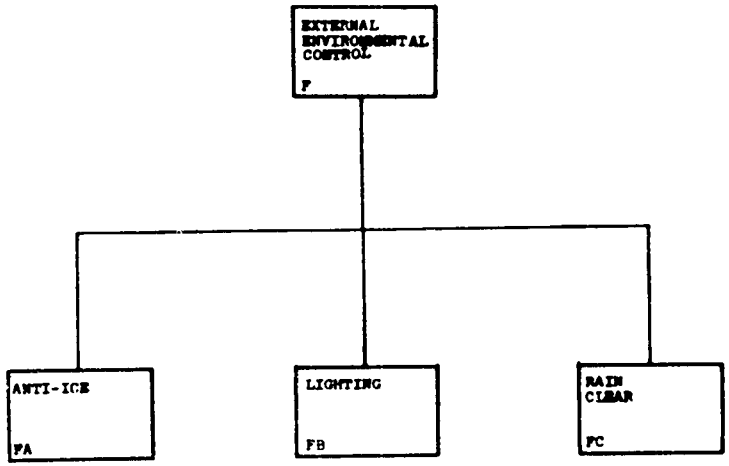

Section F-1 | Section F-2 | Section F-3

Aircraft: F-4J	
Title: Functional Diagram EXTERNAL ENVIRONMENT SECTION	
Document:	**rev. date**
Date:	

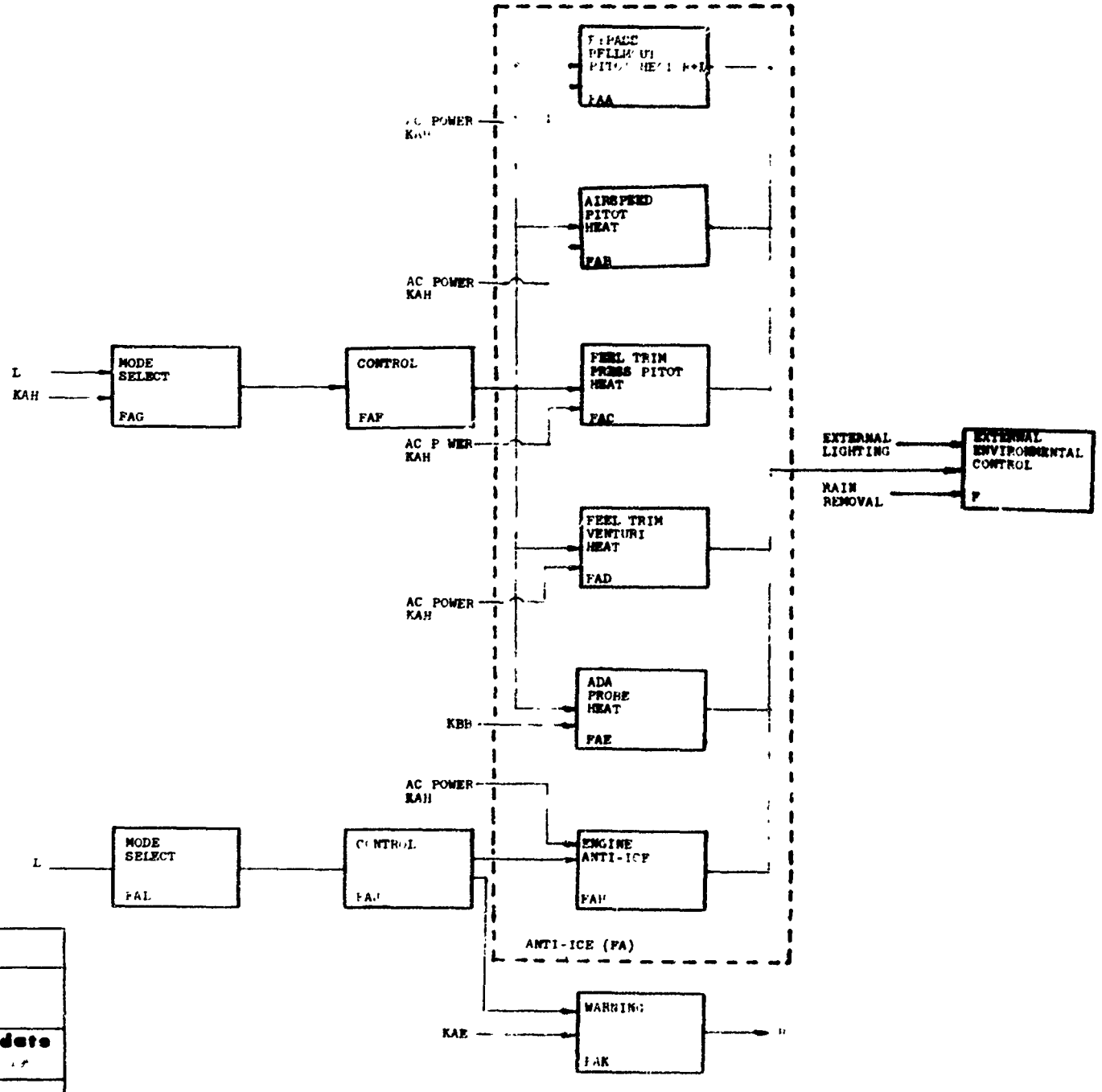

Aircraft: F-4J	
Title: Functional Diagram	
Document:	**rev. date**
Date:	

ARINC

Sect 1 - F-1

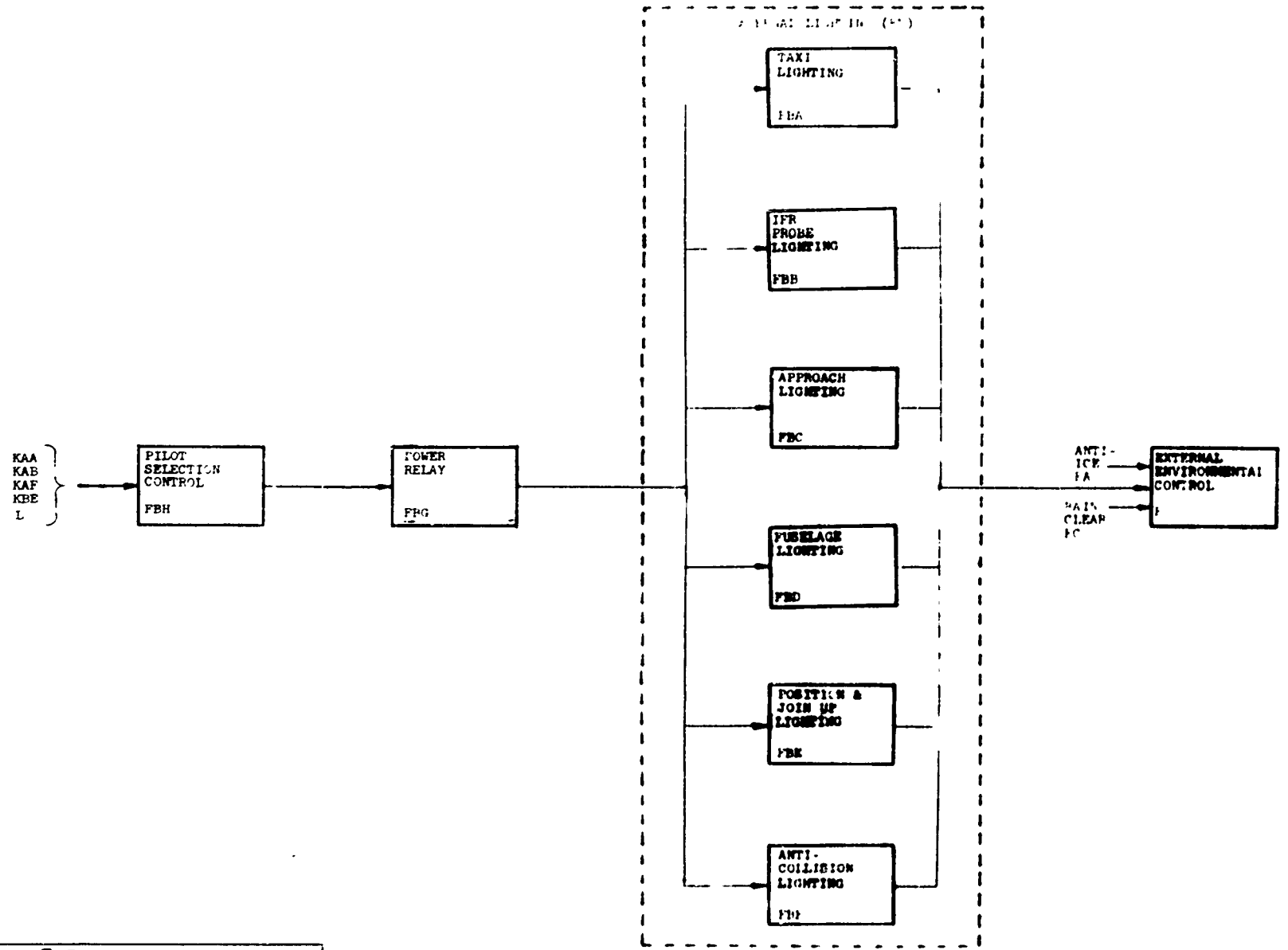

Aircraft: F-4J	
Title: Functional Diagram	
Document:	**rev. date**
Date:	

ARINC

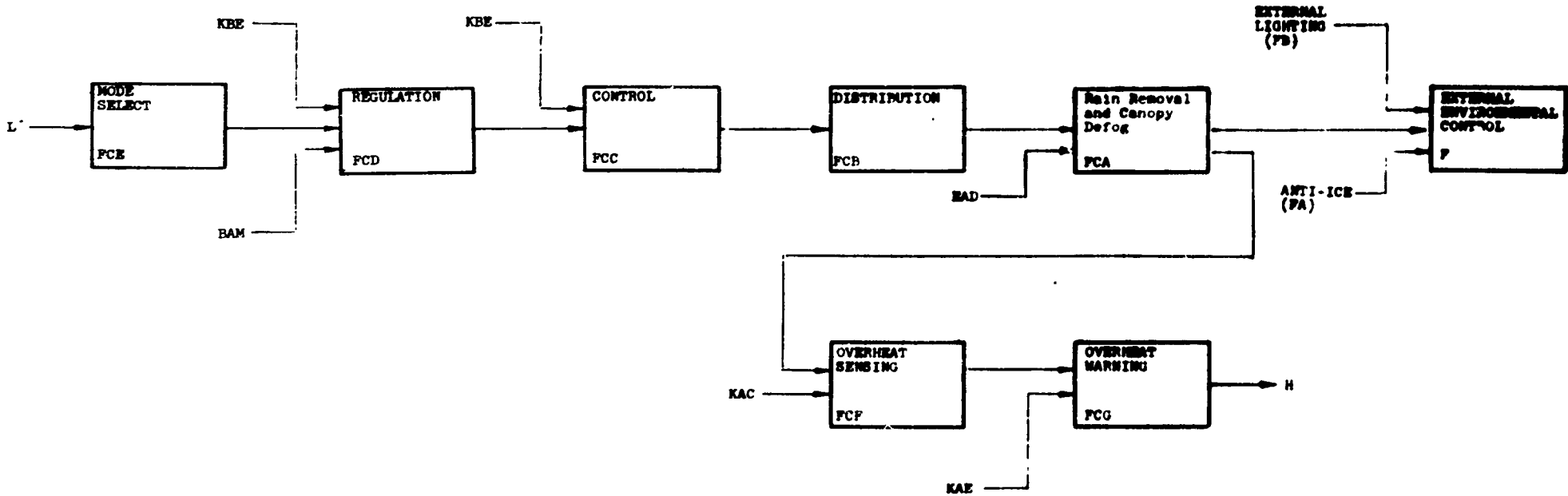

Aircraft: F-4J

Title: Functional Diagram
EXTERNAL ENVIRONMENTAL CONTROL (F)
RAIN REMOVAL (FCA)

Document: NAVAIR 01-245FDL-2-2.[illegible]

rev. date [illegible]

Date: 23 April 19[illegible]

Revised 20 Ma[illegible] 19[illegible]

ARINC

	TITLE	MUC	ALPHA	INPUT	DEP FUNC	CD FC	AL FN	W	SENSITIVITY 123456789
	•BYPASS BELLMOUTH PITOT HT	J	FAA	FAF	F	AF			300444548
		J	FAA	KAM					
		J27941M	FAAA					A	
	•AIRSPEED PITOT HEAT	J	FAB	FAF	F	AE			676333378
		J	FAB	KAM					
		J01132	FABA					A	
	•PEEL TRIM PROBE PROBE HT	J	FAC	FAF	F	AB			838111238
		J	FAC	KAM					
		J14337	FACA					A	
	•PEEL TRIM VENTURI HEAT	J	FAD	FAF	F	AB			C38111238C
		J	FAD	KAM					
		J14336	FADA					A	
	•ADA PROBE HEAT	J	FAE	FAF	F	AB			049111340
		J	FAE	KDB					
		J30008	FAEA					A	
	CONTROL-SENSORS ANTI-ICE	J	FAF	FAC	FAA				AAAAAAAAA
		J	FAF		FAB				AAAAAAAAA
		J	FAF		FAC				AAAAAAAAA
		J	FAF		FAD				AAAAAAAAA
		J	FAF		FAE				AAAAAAAAA
13	15 AMP C/B-A/S AND PEEL S/B	J41111•	FAFA					A	
14	5AMP C/B-BELLMOUTH	J42198•	FAFB					A	
15	5AMP C/B-ADA PROBE HEATER	J42198•	FAFC					A	
16	RELAY-BELLMOUTH PITOT HTR	J42111•	FAFD					A	
	ANGLE SCISSORS SWITCH	J13149	FAAAAB					A	
	NOSE GEAR DWN LIMIT SWITCH	J13143	DAABAA					A	
19	ADA HEATER RELAY	J42111•	FAFE					A	
	MODE SELECT	J	FAG	KAM	FAF				AAAAAAAAA
21		J	FAG	L					
22	SWITCH-AIRSPED AND PEEL S/B	J31130	FAGA					A	
23	•ENGINE ANTI-ICE	J	FAH	FAJ	F	A			022141213
24		J	FAH	KAM					
	CONTROL-ENGINE ANTI-ICE	J	FAJ	FAL	FAH				AAAAAAAAA
		J	FAJ		FAK				AAAAAAAAA
27	5AMP C/B-ANTI-ICE	J42191•	FAJA					A	
28	ANTI-ICE VALVE	J23481••	FAJB					A	
29	ANTI-ICE VALVE	J23481••	FAJC					A	
		J	FAK	FAJ	M				999999999
31		J	FAK	KAL					
32	5AMP FUSE	J23481••	FAKA					A	
33	DIFF PRESS SWITCH	J23482	FAKB					A	
34	CAUTION LITE CONTROL ASSY	J23481••	FAKC					A	
35	CAUTION LITE CONTROL ASSY	J23481••	FAKD					A	
36	CAUTION LITE	J23481••	FAKE					A	
37	CAUTION LITE	J23481••	FAKF					A	
	MODE SELECT	J	FAL	L	FAJ				AAAAAAAAA
39	ANTI-ICE SWITCH	J23481••	FALA					A	
	•TAXI LIGHTING	K	FBA	FBC	F	DG			200000003
	TAXI LIGHT	K44229	FBAA					A	
	•IFR PROBE LIGHTING	K	FBB	FBC	F	DG			000909000
	IFR PROBE LIGHT	K44228	FBBA					A	
	•APPROACH LIGHTING	K	FBC	FBC	F	DG			000000010

	TITLE	MUC	ALPHA	INPUT	DEP FUNC	CD FC	AL FN	W	SENSITIVITY 123456789
	APPROACH LIGHTS	K44227	FBCA					A	
	•FUSELAGE LIGHTING	K	FBD	FBC	F	DG			111111111
	FUSELAGE LIGHTS	K44220	FBDA					A	
	UPPER LIGHT	K44221	FBDB					A	
	LOWER LIGHT	K44222	LFBDC					A	
	LOWER LIGHT	K44222	RFBDC					A	
	•POSITION JOIN-UP LIGHTS	K	FBE	FBC	F	DG			112222211
	WING-TIP JOIN UP LIGHTS	K44231	LFBEA					A	
	WING-TIP POSITION LIGHTS	K44232	LFBEB					A	
	WING-TIP JOIN-UP LIGHTS	K44231	RFBEC					A	
	WING-TIP JOIN-UP LIGHTS	K44232	RFBED					A	
	TAIL LIGHT	K44223	FBEE					A	
	•ANTI-COLLISION LIGHTING	K	FBF	FBC	F	DG			011111110
	ANTI-COLLISION LIGHTS	K44224	FBFA					A	
	POWER DISTRIBUTION	K	FBG	FBM	FBA				AAAAAAAAA
		K	FBG		FBB				AAAAAAAAA
		K	FBG		FBC				AAAAAAAAA
		K	FBG		FBD				AAAAAAAAA
		K	FBG		FBE				AAAAAAAAA
		K	FBG		FBF				AAAAAAAAA
	APPROACH LIGHT RELAY	K42112•	FBGA					A	
	WING TIP LIGHT RELAY	K42112•	FBGB					A	
	ANTI-COLLISION LIGHT RELAY	K42112•	FBGC					A	
	FLASHER RELAY-ANTI COLLISN	K42112•	FBGD					A	
	FLASHER RELAY-JOIN UP LIGHT	K42112•	FBGE					A	
	EXTERIOR LIGHTS FLASHER	K44213	FBGF					A	
	APPROACH LIGHT DIM RELAY	K42112•	FBGG					A	
	PILOT SELECTION/CONTROL	K	FBH	L	FBC				AAAAAAAAA
26		K	FBH	KAA					
26		K	FBH	KAB					
26		K	FBH	KAF					
26		K	FBH	KBE					
27	TAXI LITE SWITCH	K44217	FBHA					A	
28	15 AMP TAXI LITE CKT BRKR	K4422•	FBHB					A	
29	IFR PROBE LITE SWITCH	K4422•	FBHC					A	
30	IFR PROBE LITE DIM/BRT CTRL	K4422•	FBHD					A	
31	5 AMP IFR PROBE CKT BRKR	K42152•	FBHE					A	
32	WING LITES SWITCH	K4423•	FBHF					A	
33	TAIL LITE SWITCH	K4422•	FBHG					A	
34	WING LITE DIM CKT BRKR	K42152•	FBHH					A	
35	WING LITE BRT CKT BRKR	K42152•	FBHJ					A	
36	EXTERIOR LITES MASTER SW	K44219	FBHK					A	
37	STEADY/FLASH SW-EXT LITES	K4421•	FBHL					A	
38	FUSELG LITES ON/OFF SWITCH	K4422•	FBHM					A	
39	FUSELG LITES-DIM/BRT SW	K4422•	FBHN					A	
40	FUSELG LITES FLASH SWITCH	K44226	FBHP					A	
41	5 AMP MASTER SW CKT BRKR	K42152•	FBHQ					A	
42	ANTI-COLL LITES CKT BRKR	K4422•	FBHR					5	

	TITLE	LOC	ALPHA	INPUT	DEP FUNC	CD FC	AL FN	SENSITIVITY W 123456789
		J	FAB	K&=				
		J91132	FABA				A	
	*FEEL TRIM PROBE PROBE HT	J	FAC	FAF	F	48		038111230
		J	FAC	K&=				
		J14337	FACA				A	
	*FEEL TRIM STATUS HEAT	J	FAD	FAF	F	48		038111230
		J	FAD	K&=				
		J14336	FADA				A	
	*ADA PROBE HEAT	J	FAE	FAF	F	48		049111540
		J	FAE	K00				
		J50869	FAEA				A	
	CONTROL-SENSING ANTI-ICE	J	FAF	FAC	FAA			AAAAAAAAA
		J	FAF		FAB			AAAAAAAAA
		J	FAF		FAC			AAAAAAAAA
		J	FAF		FAD			AAAAAAAAA
		J	FAF		FAE			AAAAAAAAA
13	15 AMP C/B-A/S AND FEEL SYS	J91131	FAFA				A	
14	5AMP C/B-BELLMOUTH	J42192•	FAFB				A	
15	5AMP C/B-ADA PROBE HEATER	J42193•	FAFC				A	
16	RELAY-BELLMOUTH PITOT HTR	J42111•	FAFD				A	
	SPACE RESERVED	J13149	FAFAA				A	
	NOSE GEAR DOWN LIMIT SWITCH	J13143	DAGFAA				A	
19	ADA HEATER RELAY	J42111•	FAFE				A	
	NODE SELECT	J	FAG	K&=	FAF			AAAAAAAAA
21		J	FAG	K				
22	SWITCH-AIRSPEED AND FEEL SYS	J91130	FAGA				A	
23	ENGINE ANTI-ICE	J	FAH	FAJ	F	A		022111210
24		J	FAH	K&=				
	CONTROL-ENGINE ANTI-ICE	J	FAJ	FAJ	FAH			AAAAAAAAA
		J	FAJ		FAH			AAAAAAAAA
27	5AMP C/B-ANTI-ICE	J42191•	FAJA				A	
28	ANTI-ICE VALVE	J23681••	FAJB				A	
29	ANTI-ICE VALVE	J23681••	FAJC				A	
		J	FAK	FAJ	J			999999999
31		J	FAK	K&t				
32	5AMP FUEL	J23681••	FAKA				A	
33	DIFF PRESS SWITCH	J23682	FAKB				A	
34	CAUTION LITE CONTROL ASSY	J23681••	FAKC				A	
35	CAUTION LITE CONTROL ASSY	J23681••	FAKD				A	
36	CAUTION LITE	J23681••	FAKE				A	
37	CAUTION LITE	J23681••	FAKF				A	
	MODE SELECT	J	FAL	L	FAJ			AAAAAAAAA
39	ANTI-ICE SWITCH	J23681••	FALA				A	
	•TAXI LIGHTING	K	FBA	FAC	F	JG		200000003
	TAXI LIGHT	K44229	FBAA				A	
	•IFR PROBE LIGHTING	K	FBB	FAC	F	JG		000060000
	IFR PROBE LIGHT	K4422•	FBBA				A	
	•APPROACH LIGHTING	K	FBC	FAC	F	JG		000000010

	TITLE	LOC	ALPHA	INPUT	DEP FUNC	CD FC	AL FN	SENSITIVITY W 123456789
	APPROACH LIGHTS	K44227	FBCA				A	
	•FUSELAGE LIGHTING	K	FBD	FAC	F	JG		111111111
	FUSELAGE LIGHTS	K44220	FBDA				A	
	UPPER LIGHT	K14221	FBDB				A	
	LOWER LIGHT	K44222	LFBDC				A	
	LOWER LIGHT	K44222	RFBDC				A	
	•POSITION JOIN-UP LIGHTS	K	FBE	FAC	F	JG		1122112211
	WING-TIP JOIN UP LIGHTS	K44231	LFBEA				A	
	WING-TIP POSITION LIGHTS	K44232	LFBEB				A	
	WING-TIP JOIN-UP LIGHTS	K44231	RFBEC				A	
	WING-TIP JOIN-UP LIGHTS	K44232	RFBED				A	
	TAIL LIGHT	K44223	FBEE				A	
	•ANTI-COLLISION LIGHTING	K	FBF	FAC	F	JG		011111110
	ANTI-COLLISION LIGHTS	K44224	FBFA				A	
	POWER DISTRIBUTION	K	FBG	FBH	FBA			AAAAAAAAA
		K	FBG		FBB			AAAAAAAAA
		K	FBG		FBC			AAAAAAAAA
		K	FBG		FBD			AAAAAAAAA
		K	FBG		FBE			AAAAAAAAA
		K	FBG		FBF			AAAAAAAAA
	APPROACH LIGHT RELAY	K42112•	FBGA				A	
	WING TIP LIGHT RELAY	K42112•	FBGB				A	
	ANTI-COLLISION LIGHT RELAY	K42112•	FBGC				A	
	FLASHER RELAY-ANTI COLLISN	K42112•	FBGD				A	
	FLASHER RELAY-JOIN UP LIGHT	K42112•	FBGE				A	
	EXTERIOR LIGHTS FLASHER	K4421J	FBGF				A	
	APPROACH LIGHT DIM RELAY	K42112•	FBGG				A	
	PILOT SELECTION/CONTROL	K	FBH	L	FBG			AAAAAAAAA
26		K	FBH	KAA				
26		K	FBH	KAB				
26		K	FBH	KAF				
26		K	FBH	KPE				
27	TAXI LITE SWITCH	K44217	FBHA				A	
28	15 AMP TAXI LITE CKT BRKR	K4422•	FBHB				A	
29	IFR PROBE LITE SWITCH	K4422•	FBHC				A	
30	IFR PROBE LITE DIM/BRT CTRL	K4422•	FBHD				A	
31	5 AMP IFR PROBE CKT BRKR	K42152•	FBHE				A	
32	WING LITES SWITCH	K4422•	FBHF				A	
33	TAIL LITE SWITCH	K4422•	FBHG				A	
34	WING LITE DIM CKT BRKR	K42152•	FBHH				A	
35	WING LITE BRT CKT BRKR	K42152•	FBHJ				A	
36	EXTERIOR LITES MASTER SW	K44215	FBHK				A	
37	STEADY/FLASH SW-EXT LITES	K4421•	FBHL				A	
38	FUSELG LITES ON/OFF SWITCH	K4422•	FBHM				A	
39	FUSELG LITES-DIM/BRT SW	K4422•	FBHN				A	
40	FUSELG LITES FLASH SWITCH	K4422•	FBHP				A	
41	5 AMP MASTER SW CKT BRKR	K42152•	FBHQ				A	
42	ANTI-COLL LITES CKT BRKR	K4422•	FBHR				5	

	TITLE	WUC	ALPHA	INPUT	DEP FUNC	CB FC	AL FN	SENSITIVITY W 123456789
	NOSE GEAR DWN LIMIT SW	K13143	DAABAA				A	
	R MAIN GEAR DWN LIMIT SW	K13142	RDAAAAC				A	
	L MAIN GEAR DWN LIMIT SW	K13142	LDAAAAC				A	
	LMAIN GEAR SCISSORS SW	K13145	LDABADG				A	
	NOSE DWN LIMIT SWITCH	K13032	AACEC				A	
40	NOSE BYPASS SWITCH	K1301*	FBJF				A	
	FLAP LIMIT SWITCH	K1400F	CBBBH				A	
	FLAP FLASHER RELAY	K42112*	FBJH				A	
	5 AMP CKT BRKR LITE	K42192*	FBJK				A	
	5 AMP CKT BRKR-A LITE RELAY	K42192*	FBJL				A	
	FLAP-UP FLASHER	K1400*	FBJM				A	
	5 AMP CKT BRKR-FLAP FLASHER	K42192*	FBJN				A	
	RAIN REMOVAL/CANOPY DEFOG	L	FCA	FCB	F	DG		242121252
		L	FCA	EAD	FCF			AAAAAAAAA
03	RAIN REMOVAL NOZZLE	L41313	FCAA				A	
	DISTRIBUTION	L	FCB	FCC	FCA			AAAAAAAAA
05	DRAIN VALVE	L4131*	FCBA				A	
06	PRIMARY HEAT EXCHANGER	L41120	EAAGC				A	
07	DUCT	L4131*	FCBC				A	
	CONTROL	L	FCC	FCD	FCB			AAAAAAAAA
09		L	FCC	KBE				
10	RAIN REMOVAL VALVE	L41310	FCCA				A	
11	BYPASS VALVE	L41316	FCCB				A	
	REGULATION	L	FCD	FCE	FCC			AAAAAAAAA
13		L	FCD	BAM				
		L	FCD	KBE				
14	PRESS REGULATR/SHUT-OFF VLV	L41312	FCDA				A	
	MODE SELECT	L	FCE	L	FCD			AAAAAAAAA
16	RAIN REMOVAL SWITCH	L4131A	FCEA				A	
17	5AMP CIRCUIT BREAKER	L42192*	FCEB				A	
	OVERHEAT SENSING	L	FCF	FCA	FCG			AAAAAAAAA
		L	FCF	KAC				
20	5AMP CIRCUIT BREAKER	L42192*	FCFA				A	
	TEMP SENSING AMPLIFIER	L4131*	FCFB				A	
22	TEMP SENSOR	L41311	FCFC				A	
	OVERHEAT WARNING	L	FCG	FCF	H			011111110
24		L	FCG	KAE				
25	5AMP CIRCUIT BREAKER	L42192*	FCGA				A	
26	TEST RELAY	L42111*	FCGB				A	
57	PANEL CAUTION LITE	L4131*	FCGC				A	

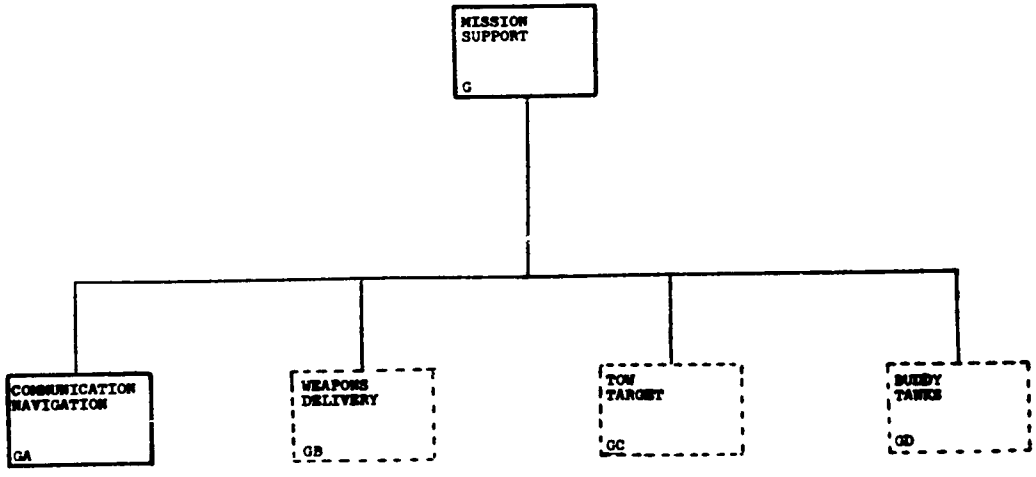

Section G-1

Aircraft: F-4J	
Title: Functional Diagram MISSION SUPPORT SECTION	
Document: NA	**rev. date** NA
Date: [illegible]	

Section G

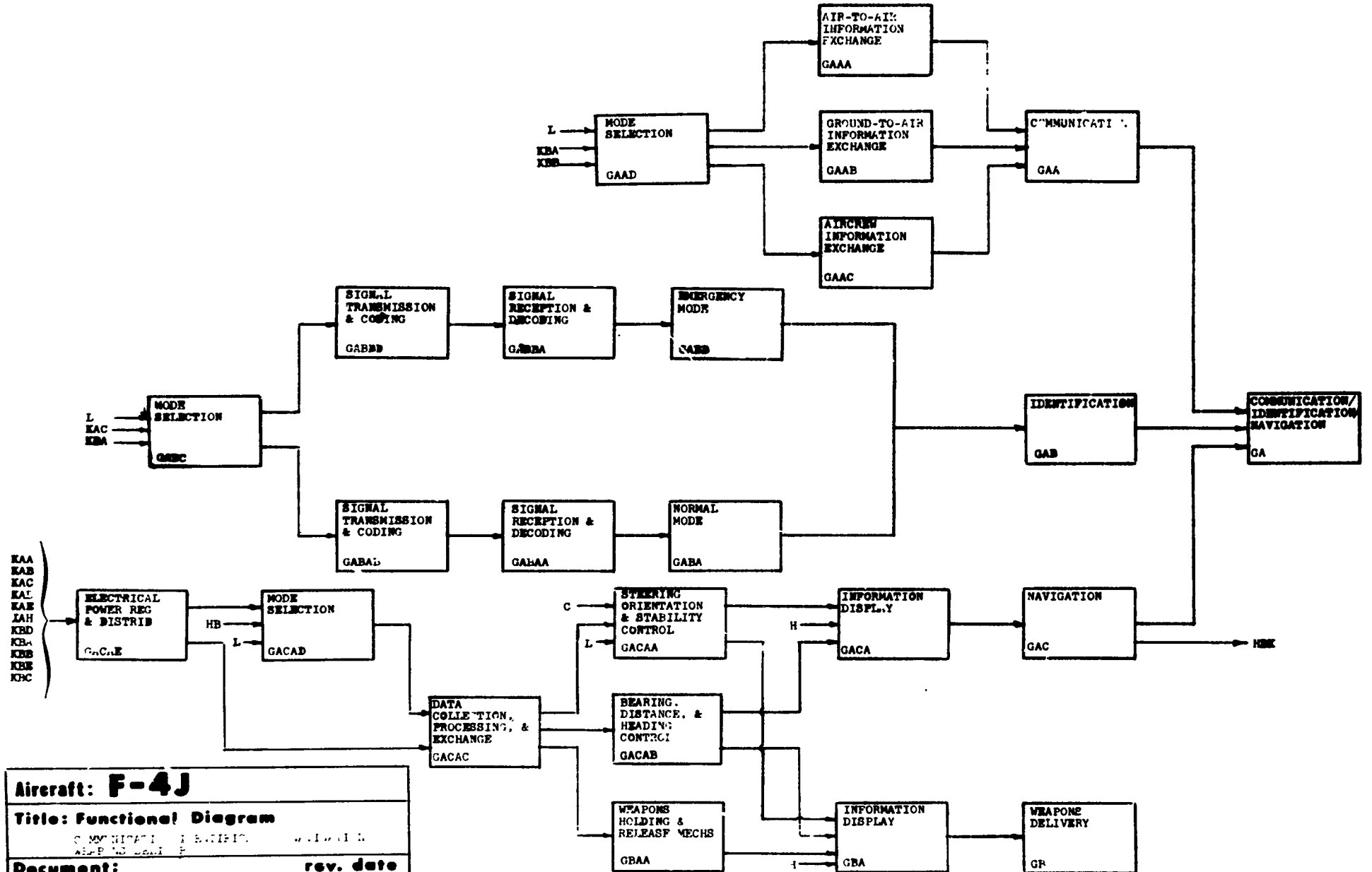

Aircraft: F-4J

Title: Functional Diagram

COMMUNICATION IDENTIFICATION NAVIGATION WEAPONS DELIVERY

Document: **rev. date**

Date:

Revised 20 May 1969 ARINC

	TITLE	MUC	ALPHA	INPUT	DEP FUNC	CO FC	AL PN	SENSITIVITY W 123456789
	*MISSION SUPPORT	M	G	0A				0020000000
00		M	G	00				
00		M	G	0C				
00		M	G	0D				
	COM/IDENTIF/NAVIGATION	M	GA	GAA	G	E		AAAAAAAAAA
02		M	GA	GAB				
03		M	GA	GAC				
04	COMMUNICATION	M	GAA	GAAA	GA			0255555510
05		M	GAA	GAAB				
06		M	GAA	GAAC				
		M	GAA	EC*				
		M	GAA	EB*				
		M	GAA	EB6				
		M	GAA	EBT				
07	*AIR TO AIR INFORMATION EXCHM		GAAA	GAAD	GAA			0111111100
08	RADIO SET CONTRL C-6684/ASQM	633414	GAAAA				A	
09	RAD RCV-TRNS RT-793/ASQ	M6319***	GAAAB				A	
10	RADIO RCVR R-1286/ARR-69	M6334100	GAAAC				A	
11	AMP REL ASSY AM-3624/ARA-90	M631****	GAAAD				A	
12	ADF ANTENNA AB-909/ARA-48	M631****	GAAAE				A	
13	UHF COMM FILTER	M67120	GAAAF				A	
14	ANTENNA SELECTOR SWITCHES	M631****	GAAAG				A	
15	COMM COAX RELAY	M63181C0	GAAAH				A	
16	UHF COMM ANTENNAS	M6312N	GAAAJ				A	
17	FREQ CHANL IND ID-1311A/ASQ	M631****	GAAAK				A	
18	ATTITUDE REF SGNL COMPUTER	M73110	GAAAL				A	
19	NDR RCVR-TRNSM CR-18A/ALQ-1	M69*****	GAAAM				A	
20	FWD COCKPIT HEADSET	M64016	GAAAN				A	
21	AFT COCKPIT HEADSET	M64016	GAAAP				A	
22	FWD INTERCOMM AMPLIFIER	M6401N	GAAAQ				A	
23	AFT INTERCOMM AMPLIFIER	M6401N	GAAAR				A	
24	TAKE COMMAND RELAY PANEL	M6712M	GAAAS				A	
	*AIR-TO-GROUND INFRMTN EXCH	M	GAAB	GAAD	GAA			0233AAAA0
28	INTERCOMM STATION LB-459	M6712E	GAABA				A	
29	UHF-ICS SWITCH	M6401*	GAABB				A	
30	ICS FOOT SWITCH	M6401*	GAABC				A	
31	HEADSET-MICROPHONE ADAPTER	M6401*	GAABD				A	
32	EXTERNAL RECPTACLE	M6401*	GAABE				A	
33	INTERCOMM STATION LB-460	M6712F	GAABF				A	
34	UHF COMM COAX RELAY	M63181C0	GAABG				A	
35	AMP REL ASSY AM-3624/ARA-90	M631****	GAAAD				A	
36	TAKE COMMAND RELAY PANEL	M6712M	GAABJ				A	
39	FWD HEADSET	M64016	GAAAN				9	
40	AFT HEADSET	M64016	GAAAP				9	
41	RAD RCV-TRNS RT-793/ASQ	M6319***	GAAAB				A	
42	RADIO RCV R-1286/ARR-69	M6334100	GAAAC				A	
43	UHF COMM ANTENNAS	M6312N	GAAAJ				A	
44	ANTENNA SELECTOR SWITCHES	M631****	GAAAG				A	
	*AIRCREW INFO EXCHANGE	M	GAAC	GAAD	GAA			000000000
46	AUDIO AMPLIFIER	M6401*	GAABA				A	
47	CONTROL UNIT	M6401*	GAABC				A	
48	HEAD SET MICROPHONE ADAPTER	M6401*	GAABD				A	
51	FWD HEADSET	M64016	GAAAN				A	
52	AFT HEADSET	M64016	GAAAP				A	
	*MODE SELECT	M	GAAD	L	GAAA			AAAAAAAAA
		M	GAAD	KBA	GAAB			AAAAAAAAA

	TITLE	WUC	ALPHA	INPUT	DEP FUNC	CD AL FC FN	SENSITIVITY W 123456789
		M	GAAD	KBB	GAAC		AAAAAAAAA
56	INTERCOMM STATION LB-459	M67128	GAABA			A	
57	UHF-ICS SWITCH	M64811	GAABB			A	
58	ICS FOOTSWITCH	M64811	GAABC			A	
59	COMM ANTENNA SELECTOR SWTCH	M63100	GAAAC			A	
60	RADIO SET CONTROL	M63341	GAAAA			A	
61	CNI-NAV COMP SWITCH	M67128	GAADC			A	
62	DATA LINK CONTROL PANEL	M6	GAADD			A	
63	INTERCOMM STATION LB-460	M67129	GAABF			A	
64	IDENTIFICATION	M	GAB	GAMA	GA		000000000
65		M	GAB	GABA			
66	NORMAL MODE	M	GABA	GABAA	GAB		000000000
67	SIGNAL RECEPTION + DECODING	M	GABAA	GABAB	GABA		000000000
68	CODER-RCVR-TRANSMITTER	M65210	GABAAA			A	
69	IFF ANTENNA	M652	GABAAB			A	
70	SIGNAL TRANSMISSION + CODING	M	GABAB	GABC	GABAA		000000000
71	CODER-RCVR-TRANSMITTER	M65210	GABABA			A	
72	IFF ANTENNA	M652	GABABB			A	
	MODE SELECT	M	GABC	L	GABBB		AAAAAAAAA
74		M	GABC	KAC	GABAB		AAAAAAAAA
75		M	GABC	KBA			
76	TRANSPONDER CONTROL SET	M65290	GABCA			A	
77	EMERGENCY MODE	M	GABB	GABBA	GAB		000000000
	SIGNAL RECEPTION + DECODING	M	GABBA	GABBB	GABB		AAAAAAAAA
79	CODER-RCVR-TRANSMITTER	M65210	GABAAA			A	
80	IFF ANTENNA	M652	GABAAB			A	
81	EMERGENCY IFF RELAY	M652	GABBAB			A	
82	EMERGENCY SWITCHES	M652	GABBAC			A	
83	SIGNAL TRANSMISSION + CODING	M	GABBB	GABC	GABBA		000000000
84	CODER-RCVR-TRANSMITTER	M65210	GABAAA			A	
85	IFF ANTENNA	M652	GABAAR			A	
86	EMERGENCY RELAY	M652	GABBAR			A	
87	EMERGENCY SWITCHES	M652	GABBAC			A	
	NAVIGATION	M	GAC	GACA	GA		002599200
		M	GAC	EBU	MBK		AAAAAAAAA
		M	GAC	EBR			
		M	GAC	EBS			
		M	GAC	EBT			
	INFORMATION DISPLAY	M	GACA	M	GAC		AAAAAAAAA
90		M	GACA	GACAA			
91		M	GACA	GACAB			
	STRNG ORNTN + STAB CONTROL	M	GACAA	C	GACA		AAAAAAAAA
		M	GACAA	GACAC	GBA		000000000
94		M	GACAA	L			
	DATA COLLECT/PROCESS/EXCHNG	M	GACAC	GACAE	GACAA		AAAAAAAAA
		M	GACAC	GACAD	GACAB		AAAAAAAAA
		M	GACAC		GBAA		000000000
98	DATA LINK SYSTEM	M6	GACACA			A	

	TITLE	WUC	ALPHA	INPUT	DEP FUNC	CD AL FC FN	SENSITIVITY W 1234567A9
99	AIR DATA COMPUTER SET	M56450	GACACR			A	
A1	TACAN NAVIGATIONAL SET	M71430	GACACC			A	
A2	ATITUDE REF BOMB COMPTR SET	M73110	GACACD			A	
A3	NAVIGATIONAL COMPUTER SET	M73490	GACACE			A	
A4	FLIGHT CONTROL GROUP	M57800	GACACF			A	
A5	FLIGHT DIRECTOR GROUP	M71740	GACACG			A	
A6	MISSILE CONTROL SYSTEM	M75800	GACACH			A	
A7	ELECTRONIC ALTIMETER SET	M72	GACACJ			A	
A8	ELINT SYSTEM	M7	GACACK			A	
A9	INTERROGATOR SET	M65320	GACACL			A	
B1	VERTICAL FLIGHT REF SET	M56260	GACACM			A	
B2	COMMUNICATION SYSTEM	M6	GAA			A	
B3	VARIABLE INLET DUCT RAMP SYS	M11310	BD			A	
B4	BYPASS BELLMOUTH SYSTEM	M2FA10	BF			A	
	BEARING/DIS/HEADING CNTRL	M	GACAB	GACAC	GACA		AAAAAAAAA
		M	GACAB		GBA		000000000
	WEAPON HOLDING + RELS MECH	M	GBAA	GACAC	GBA		000000000
	MISSILE LAUNCHERS	M75100	GBAAA			A	
	WEAPON ADAPTERS	M75200	GBAAM			A	
	BOMB RACKS + HOISTS	M75300	GBAAC			A	
	ARMAMENT PODS	M75400	GBAAD			A	
	MISSILE PYLONS	M75700	GBAAE			A	
	MK 4 CON POD SYSTEM	M75800	GBAAF			A	
	MODE SELECTION	M	GACAD	L	GACAC		AAAAAAAAA
C6		M	GACAD	MC			
C7		M	GACAD	GACAE			
	TACAN ANTENNA SELECT SWITCH	M7140	GACADA			A	
	MODE SELECTOR CONTROL	M7	GACADB			A	
	CNI-NAV COMP SWITCH	M67128	GAADCC			A	
	RADIO SET CONTROL	M63341	GAAA			A	
	TACAN NAV SET CONTROL	M7140	GACACC			A	
	BDHI MODE SWITCH	M67160	GACADF			A	
	COMPUTER CONTROL	M730	GACADG			A	
	NAV SET CONTROL	M730	GACADH			A	
	COMPASS SYSTEM CONTROLLER	M730	GACADJ			A	
	ATTITUDE INDICATOR	M5111C	GACADK			A	
	AUTOMATIC FLT CNTL SYS PANL	M730	GACADL			A	
	AUX ARMAMENT CNTL PANEL	M740	GACADM			A	
	MULTIPLE WEAPONS CNTL PANEL	M740	GACADN			A	
	BOMB CONTROL PANEL	M750	GACADP			A	
	MISSILE CONTROL PANEL	M750	GACADQ			A	
	COMPASS SYSTEM CONTROL PANL	M730	GACADR			A	
	COM-NAV GROUP CONTROL PANEL	M730	GACADS			A	
	NAV COMPUTER PANEL	M730	GACADT			A	
	CONTROL STICK ASSY	M14110	GCMB			A	
	ELECT POWER REG AND DIST	M	GACAE	KAA	GACAD		AAAAAAAAA
		M	GACAE	KAB	GACAC		AAAAAAAAA
F2		M	GACAE	KAC			

	TITLE	VUC	ALPHA	INPUT	DEP FUNC	CO AL FC FN	SENSITIVITY M 123456789
F3		M	GACAE	KAD			
F4		M	GACAE	KBA			
F5		M	GACAE	KBB			
F6		M	GACAE	KBC			
F7		M	GACAE	KBD			
F8		M	GACAE	KRE			
/9		M	GACAE	KAE			
C1		M	GACAE	KAH			
02	MULTIPLE WEAPONS RELAY PANL	M74984	GACAEA			A	
03	NO 2 MISC RELAY PANEL	M42112	GACAEB			A	
F4	LEFT UTILITY PANEL	M7480**	GACAEC			A	
05	RIGHT UTILITY + CIR BKR PNL	M7480**	GACAED			A	
06	NO 1 CIRCUIT BREAKER PANEL	M42191	GACAEE			A	
07	NO 2 CIRCUIT BREAKER PANEL	M42192	GACAEF			A	
08	AUX NO 2 MISSILE FIR RL PNL	M74984	GACAEG			A	
09*	WEAPONS DELIVERY	M	GB	GBA	C		000000000
H1*	INFORMATION DISPLAY	M	GBA	H	GB		000000000
H2		M	GBA	GACAA			
H3		M	GBA	GACAB			
H4		M	GBA	GRAA			

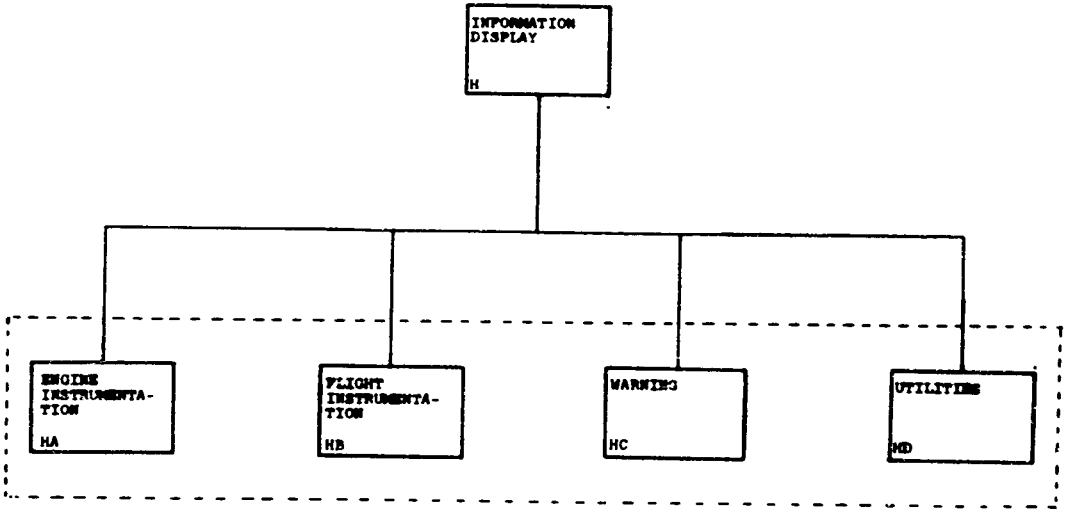

Section H-1 (Sheet 1)
Section H-1 (Sheet 2)

Section H

Aircraft: F-4J	
Title: Functional Diagram INFORMATION DISPLAY SECTION	
Document: NA	**rev. date** NA
Date:	

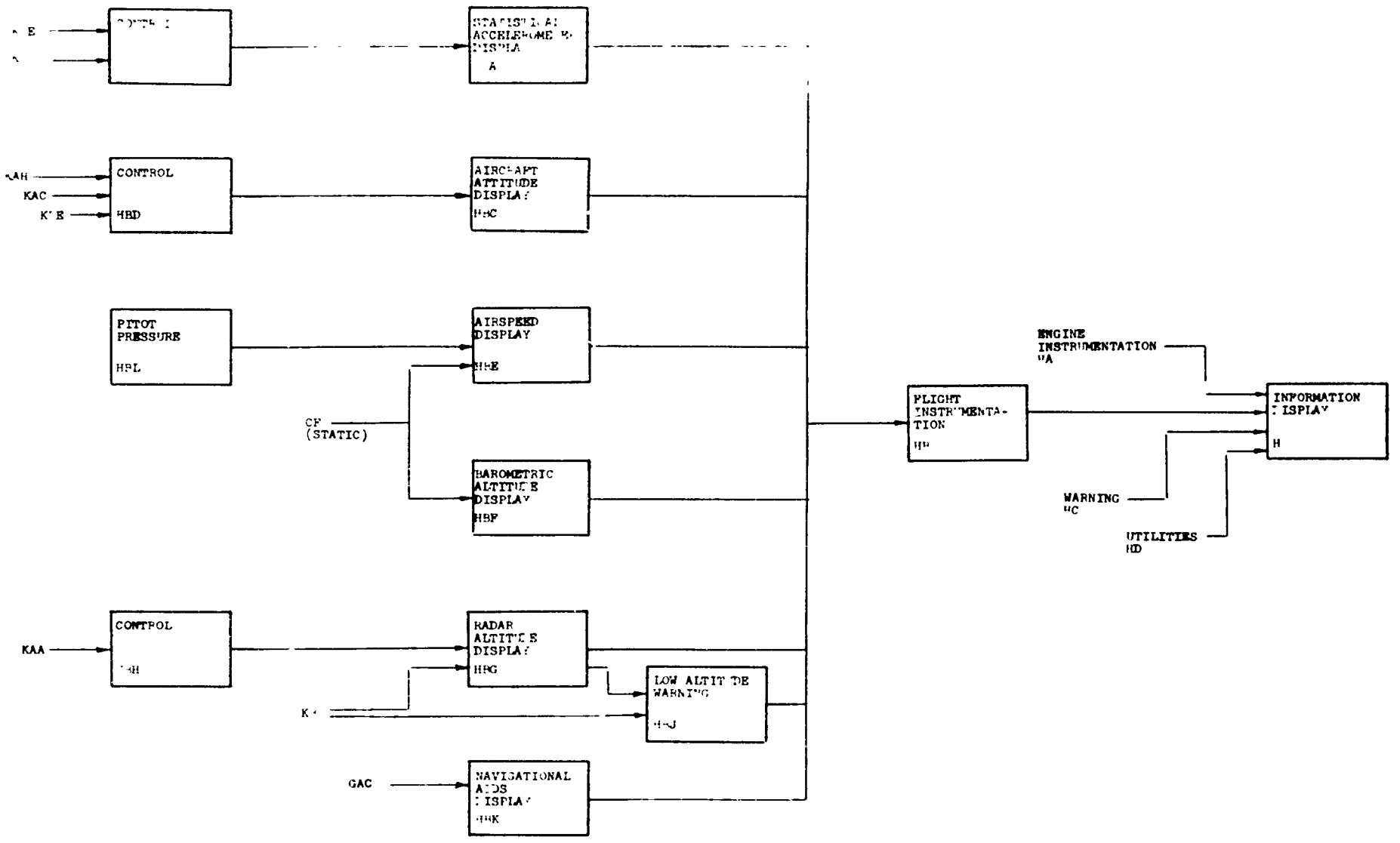

Aircraft:	**F-4J**
Title:	**Functional Diagram**
Document:	**rev. date**
Date:	

ARINC

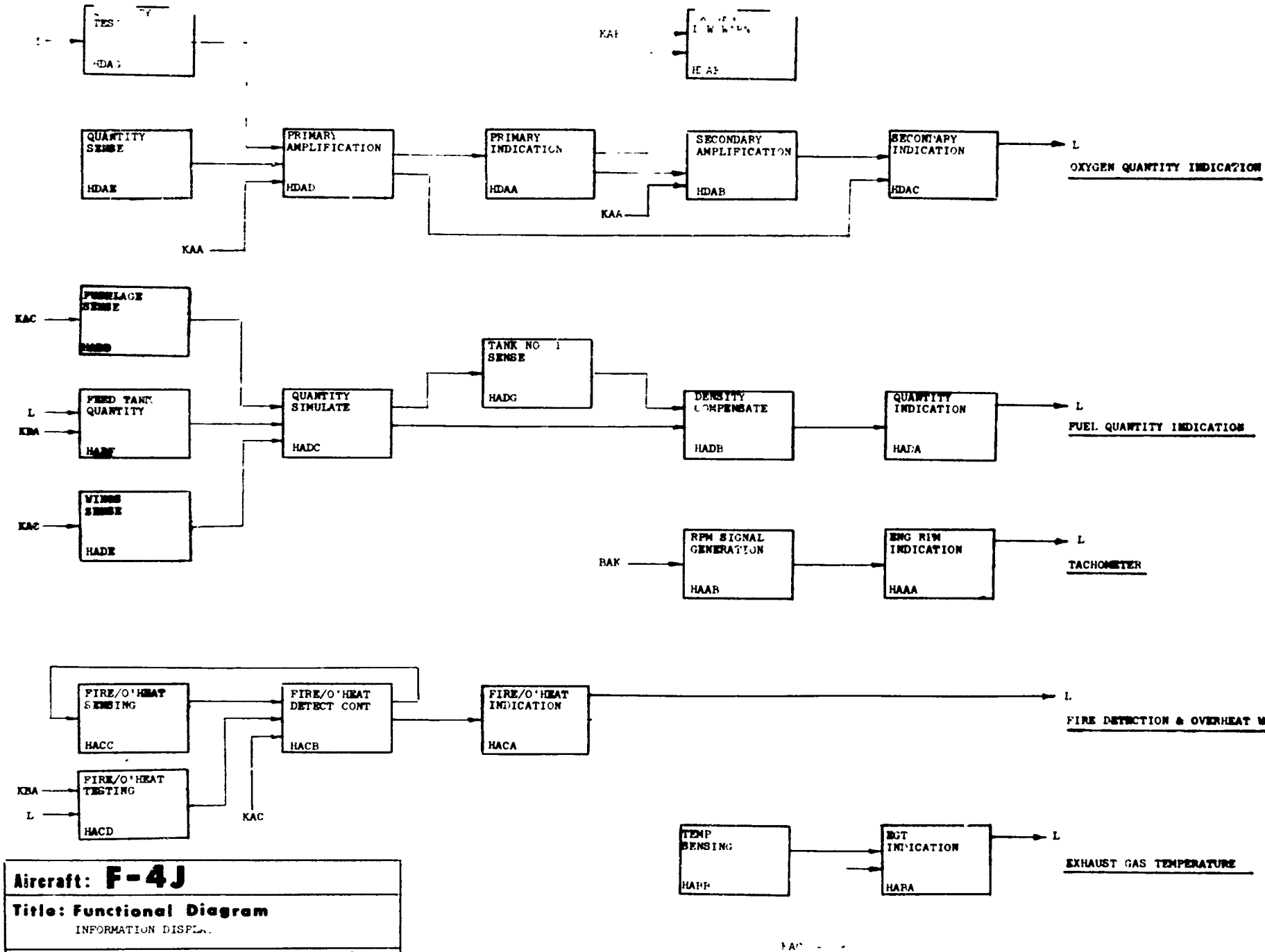

Aircraft: F-4J

Title: Functional Diagram

INFORMATION DISPL...

Document: NAVAIR ...-4... **rev. date** ... Mar 1...

Date: ... Apr ...

Revised ... Ma... 19...

Section H-1 (Sheet 2)

	TITLE	WUC	ALPHA	INPUT	DEP FUNC	CD AL SENSITIVITY FC FN M 1234567890
	INFORMATION DISPLAY		M	MA	L	AAAAAAAAA
			M	MB		
			M	MBAA		
			M	MBAC		
			M	MBAF		
	ENGINE INSTRUMENTATION		MA	MAAA	M	AAAAAAAAA
			MA	MABA		
			MA	MACA		
			MA	MADA		
	ENGINE RPM INDICATION	R	RMAAA	RMAAB	MA	0A2222210
	ENGINE RPM INDICATION	R	LMAAA	LMAAB	MA	0A2222210
02	TACHOMETER INDICATOR	R91411	RMAAAA			A
	TACHOMETER INDICATOR	R91411	LMAAAA			A
	RPM SIGNAL GENERATION	R	RMAAB	RBAK	RMAAA	AAAAAAAAA
	RPM SIGNAL GENERATION	R	LMAAB	LBAK	LMAAA	AAAAAAAAA
04	TACHOMETER GENERATOR	R91412	RMAABA			A
	TACHOMETER GENERATOR	R91412	LMAABA			A
	EXHAUST GAS TEMP INDICATION	R	RMABA	RMABB	MA	0A9999900
	EXHAUST GAS TEMP INDICATION	R	LMABA	LMABB	MA	0A9999900
06		R	RMABA	KAC		
		R	LMABA	KAC		
07	TEMP INDICATOR	R91423	RMABAA			A
	TEMP INDICATOR	R91423	LMABAA			A
	TEMP SENSING	R	RMABB		RMABA	AAAAAAAAA
	TEMP SENSING	R	LMABB		LMABA	AAAAAAAAA
		R	RMABB		RBABC	0A9999900
		R	LMABB		LBABC	0A9999900
09	THERMOCOUPLE	R91424	RMABBA			A
	THERMOCOUPLE	R91424	LMABBA			A
	FIRE/OVERHEAT INDICATION	R	RMACA	MACR	MA	AAAAAAAAA
	FIRE/OVERHEAT INDICATION	R	LMACA	MACR	MA	AAAAAAAAA
11	L FIRE WARNING LIGHT	R49112	LMACAA			A
11	2 FIRE WARNING LIGHT	R49112	RMACAA			A
12	L OVERHEAT WARNING LIGHT	R49122	LMACAB			A
12	R OVERHEAT WARNING LIGHT	R49122	RMACAB			A
	DETECTOR CONTROL	R	MACB	MACD	MACA	AAAAAAAAA
		R	MACB	KAC	MACC	AAAAAAAAA
		R	MACB	MACC		
	CONTROL UNIT LH FIRE	R49111	LMACBA			A
	CONTROL UNIT RH FIRE	R49111	RMACBA			A
17	CONTROL UNIT LH OVERHEAT	RJ9UIU	LMACBB			A
18	CONTROL UNIT RH OVERHEAT	RJ9UIU	RMACBB			A
	FIRE/OVERHEAT SENSING	R	MACC	MACR	MACB	AAAAAAAAA
	L FIRE DETECTOR HARNESS	R49118	LMACCA			A
	R FIRE DETECTOR HARNESS	R49118	RMACCA			A
22	L OVERHEAT DETECTOR HARNESS	R49123	LMACCB			A
23	R OVERHEAT DETECTOR HARNESS	R49123	RMACCB			A
	FIRE/OVERHEAT TESTING	R	MACD	L	MACb	A44444444
25		R	MACD	KBA		
26	TEST SWITCH	R49113	MACDA			A

	TITLE	NUC	ALPHA	INPUT	DEP FUNC	CD AL SENSITIVITY FC FN M 123456789
	FUEL QUANTITY INDICATION	R	HADA	HADB	HA	A00230940
28	FUEL QUANTITY INDICATOR	R91844	HADAA			A
	DENSITY COMPENSATION	R	HADB	HADC	HADA	AAAAAAAAA
30		R	HADB	HADC		
31	REFERENCE CONDENSOR	R9184•	HADBA			2
	QUANTITY SIMULATION	R	HADC	HADD	HADB	AAAAAAAAA
		R	HADC	HADE	HADC	AAAAAAAAA
34		R	HADC	HADF		
35	FUEL QUANTITY SIMULATOR	R91843	HADCA			A
	FUSELAGE TANKS QUANT SENSE	R	HADD	KAC	HADC	AAAAAAAAA
37	TANK NO 7 FUEL PROBE	R91842	HADDA			1
38	TANK NO 6 FUEL PROBE	R91842	HADDB			1
39	TANK NO 5 FUEL PROBE	R91842	HADDC			1
40	TANK NO 4 FUEL PROBE	R91842	HADDD			1
41	TANK NO 3 FUEL PROBE	R91842	HADDE			1
42	TANK NO 2 FUEL PROBE	R91842	HADDF			1
43	TANK NO 1 UPPER FUEL PROBE	R91842	HADDG			2
44	TANK NO 1 REF CONDENSOR	R9184•	HADDA			2
	WING TANKS SENSING	R	HADE	KAC	HADC	AAAAAAAAA
46	R O/B FUEL PROBE	R91842	HADEA			2
47	R INT FUEL PROBE	R91842	HADEB			2
48	R I/B FUEL PROBE	R91842	HADEC			2
49	L O/B FUEL PROBE	R91842	HADED			2
50	L INT FUEL PROBE	R91842	HADEE			2
51	L I/B FUEL PROBE	R91841	HADEF			2
	•FEED TANK QUANTITY INDICATER		HADF	L	HADC	AAAAAAAAA
53		R	HADF	KBA		
54	FEED TANK CHECK SWITCH	R9184•	HADFA			A
	TANK NO 1 QUANTITY SENSING	R	HADG	HADC	HADB	AAAAAAAAA
56	TANK NO 1 UPPER PROBE	R91842	HADDG			A
57	TANK NO 1 REF CONDENSOR	R9184•	HADBA			A
	PRIMARY LOX QUANTITY IND	R	HOAA	HOAD	HOAB	AAAAAAAAA
		R	HOAA		HOAF	AAAAAAAAA
		R	HOAA		M	00AAAAA00
60	LOX QUANTITY INDICATOR	R91891	HOAAA			A
	REPEATER LOX QUANTITY IND	R	HOAC	HOAR	M	00AAAAA00
		R	HOAC	HOAD		
63	LOX QUANTITY INDICATOR	R91891	HOACA			A
	PRIMARY AMPLIFICATION	R	HOAD	HOAE	HOAA	AAAAAAAAA
		R	HOAD	HOAG	HOAC	AAAAAAAAA
65		R	HOAD	KAA		
66	QUANTITY AMPLIFIER	R4721F	HOADA			A
	REPEATER AMPLIFICATION	R	HOAB	HOAA	HOAC	AAAAAAAAA
68		R	HOAB	KAA		
69	QUANTITY AMPLIFIER	R4721E	HOABA			A
	LOX QUANTITY SENSING	R	HOAE		HOAD	AAAAAAAAA
71	QUANTITY PROBE	R47117	HOAEA			A
	LOX LOW WARNING	R	HOAF	HOAA	M	002222200

	TITLE	NUC	ALPHA	INPUT	DEP FUNC	CD AL SENSITIVITY FC FN M 123456789
72		R	HOAF	KAL		
73	LOX LOW WARNING LIGHT	R47213	HOAFA			1
74	MASTER CAUTION TEST RELAY	R4711•	HOAFB			1
75	MASTER CAUTION TEST SWITCH	R4711•	HOAFC			1
	LOX QUANTITY SYSTEM TEST	R	HOAG	L	HOAD	AAAAAAAAA
	SYSTEM TEST SWITCH	R5185•	HOAGA			1
	FLIGHT INSTRUMENTATION		HB	HBA	M	AAAAAAAAA
			HB	HBC		
			HB	HBH		
			HB	HBK		
			HB	HBF		
			HB	HBG		
			HB	HBJ		
	•STATISTICAL ACCEL DISPLAY	S51112	HBA	HBB	HB	F 000111100
	CONTROL	S	HBB	KBL	HBA	AAAAAAAAA
03		S	HBB	KBB		
04	TRANSDUCER	S51142	HBBA			A
05	POWER RELAY	S5114•	HBBB			A
06	RR LG SCISSOR SWITCH	S13145	RDABA90			A
07	NLG LIMIT SWITCH	S13143	DAABAA			A
08	•ATTITUDE DISPLAY	S	HBC	HRD	HB	E 045555960
09	AOA INDICATOR	S96861	HBCA			A
10	ATTITUDE DIRECTOR INDICATOR	S73124	HBCB			A
11	STANDBY ATTITUDE INDICATOR	S5111F	HBCC			A
12	REMOTE ATTITUDE INDICATOR	S5111C	AHBCD			A
	CONTROL	S	HBD	KAH	HBC	AAAAAAAAA
14		S	HBD	KAC		
15		S	HBD	KRE		
16	GY10 CUT-OUT SWITCH	S5111•	HBDA			A
17	ERLS POWER RELAY	S5111•	HBDB			A
	•AIRSPEED DISPLAY	S	HBE	CF	HB	E 0A1111140
19		S	HBE	JRL		
20	TRUE AIRSPEED INDICATOR	S51114	FHBEA			A
21	TRUE AIRSPEED INDICATOR	S51114	AHBEB			A
22	A/S AND MACH NO. INDICATOR	S51113	FHBEC			A
23	A/S AND MACH NO. INDICATOR	S51113	AHBED			A
	NAV AIDS DISPLAY	S	HBK	GAC	HB	E 002555950
25	STANDBY COMPASS	S51212	HBKA			A
26	CLOCK	S51211	HBKB			A
27	CLOCK	S51211	FHBKC			A
28	BDHI	S5111•	AHBKD			A
29	HORIZ SITUATION INDICATOR	S5111•	FHBKE			A
30	•BAROMETRIC ALTITUDE DISPLAY	S	HBF	CF	HB	E 011111220
31	ALTIMETER	S51111	FHBFA			A
32	ALTIMETER	S51111	AHBFB			A
33	VERTICAL VELOCITY INDICATOR	S51115	HBFC			A
34	•RADAR ALTITUDE DISPLAY	S	HBG	HRH	HB	E 011111220
		S	HRG	KBB	HBJ	011111220

	TITLE	WUC	ALPHA	INPUT	DEP FUNC	CD FC	AL PN	SENSITIVITY W 123456789
36	HEIGHT INDICATOR	872342	HBB4				A	
	•LOW ALTITUDE WARNING	0	HBJ	HBB	HB	E		011111229
		0	HBJ	HBC				
	LIGHT	872342•	HBJA				A	
	CONTROL	0	HBH	KAA	HBC			AAAAAAAAA
39	5 AMP CKT BREAKER	94219•	HBH4				A	
40	5 AMP CKT BREAKER	94219•	HBHB				A	
	PITOT PRESSURE	0	HBL		HBE			0A1111140
42	PITOT/STATIC TUBE	891136	HBLA				A	

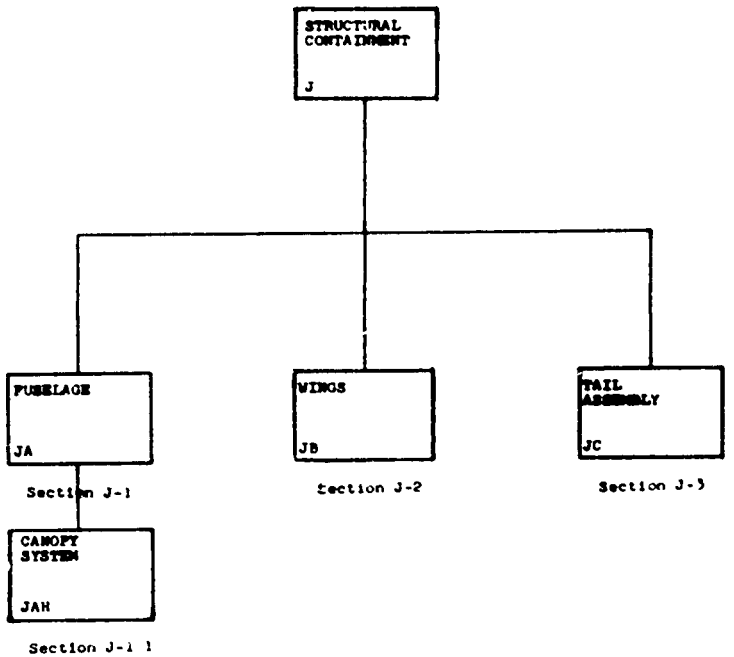

Section J

Aircraft: F-4J	
Title: Functional Diagram STRUCTURAL CONTAINMENT SECTION	
Document: NA	rev. date NA
Date: 23 Apr 1969	

STRUCTURAL CONT SECTION J

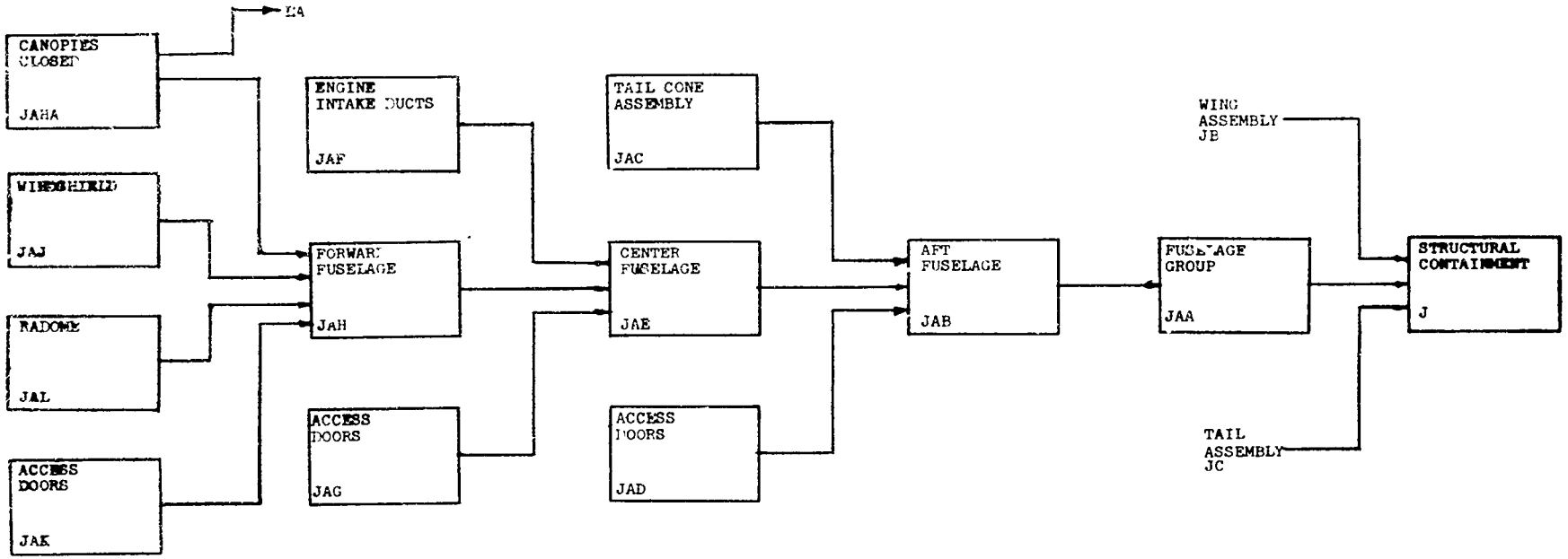

Aircraft: F-4J

Title: Functional Diagram

FUSELAGE GROUP (JA)

Document: NAVAIR [illegible] FDP [illegible] **rev. date**

Date:

Revised [illegible]

ARINC

Section J-1

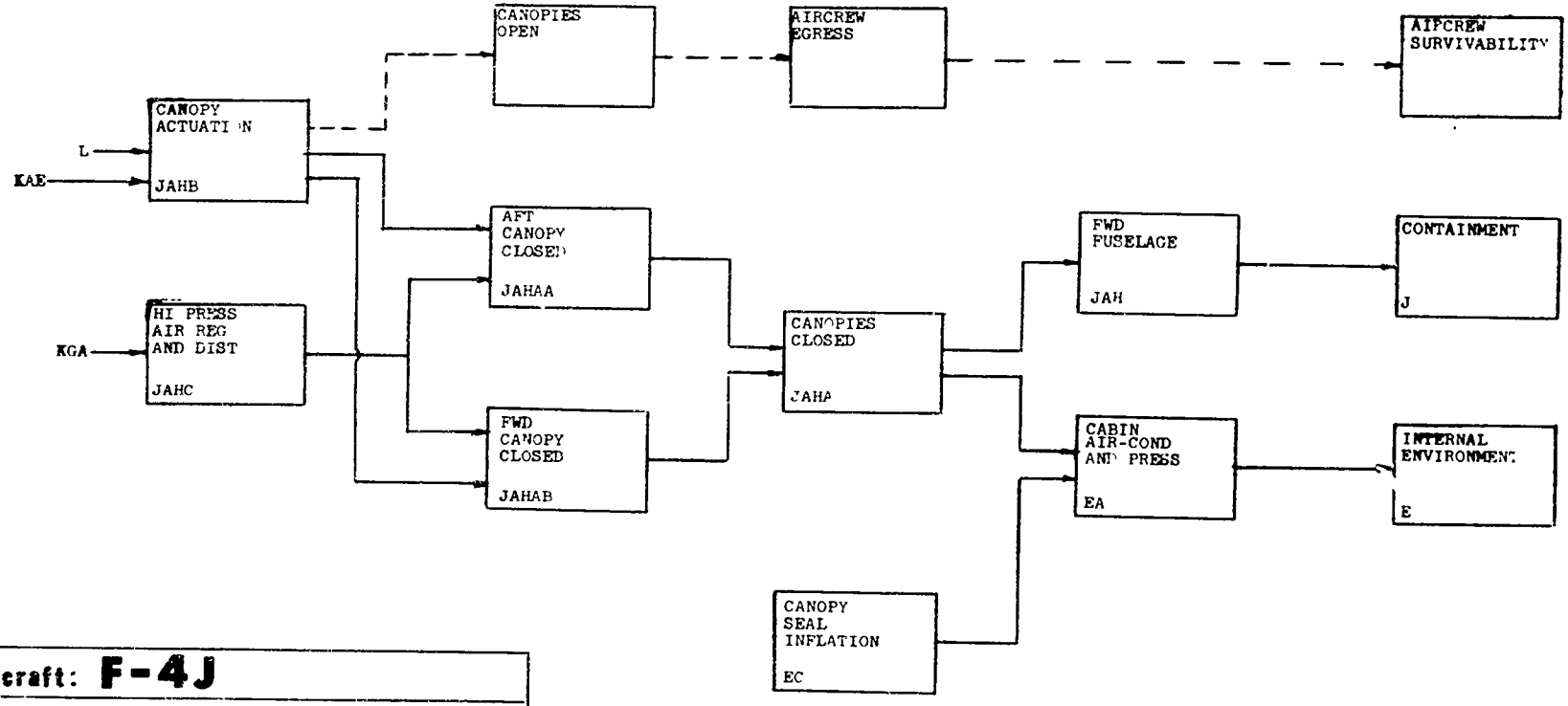

Aircraft: F-4J

Title: Functional Diagram
CANOPY SYSTEM

Document: NAVAIR [illegible]-24 FD[illegible]-1 **rev. date** 1 N[illegible]

Date: [illegible]

Revised [illegible] May [illegible] ARINC

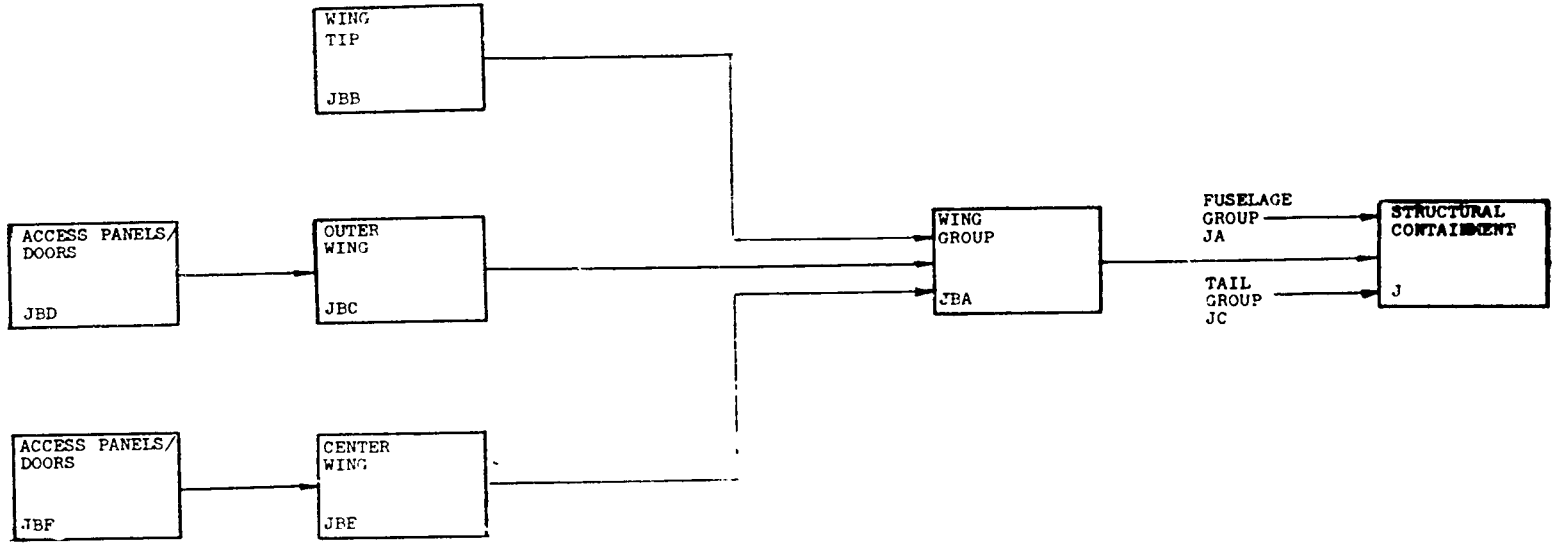

Aircraft: F-4J	
Title: Functional Diagram STRUCTURAL CONTAINMENT (J) WING GROUP (JF)	
Document: NAVAIR [illegible]	**rev. date** [illegible]
Date: [illegible] Apr [illegible]	

ARINC

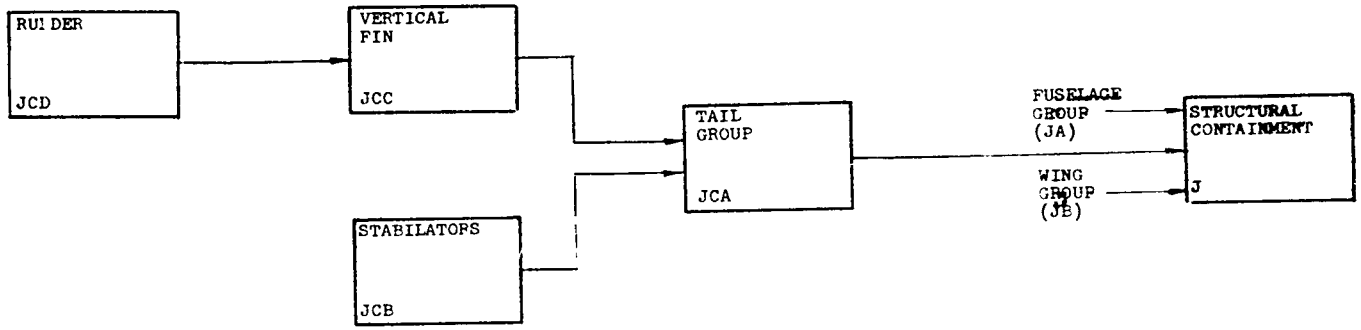

Aircraft: F-4J

Title: Functional Diagram
STRUCTURAL CONTAINMENT (J)
TAIL ASSEMBLY (JC)

Document: **rev. date**

Date:

ARINC

TITLE	WUC	ALPHA	INPUT	DEP FUNC	CD AL SENSITIVITY FC FN W 123456789
01 FUSELAGE GROUP	V	JAA	JAB	J	AAAAAAAAA
AFT FUSELAGE	V	JAB	JAC	JAA	AAAAAAAAA
03	V	JAB	JAD		
04	V	JAB	JAE		
TAIL CONE ASSEMBLY	V	JAC		JAB	AAAAAAAAA
ACCESS DOORS	V	JAD		JAB	011111110
CENTER FUSELAGE	V	JAE	JAF	JAB	AAAAAAAAA
08	V	JAE	JAG		
08	V	JAE	JAH		
ENGINE INTAKE DUCTS	V	JAF		JAE	AAAAAAAAA
ACCESS DOORS	V	JAG		JAE	011111110
FORWARD FUSELAGE	V	JAH	JAJ	JAE	AAAAAAAAA
12	V	JAH	JAK		
12	V	JAH	JAL		
	V	JAH	JAMA		
WINDSHIELD ASSEMBLY	V	JAJ		JAH	AAAAAAAAA
14 CANOPY	V1118400	JAJA			A
15 SIDE PANELS	V1111418R	JAJB			A
16 SIDE PANELS	V1111420L	JAJC			A
ACCESS DOORS	V	JAK		JAH	011111110
18 GROUP ONE	V11120	JAKA			A
GROUP TWO	V11130	JAKB			A
RADOME	V	JAL		JAH	022222220
*CANOPIES CLOSED	V	JAMA	JAMAA	JAH	039999930
	V	JAMA	JAMAB	EA	AAAAAAAAA
AFT CANOPY CLOSED	V	JAMAA	JAMC	JAMA	AAAAAAAAA
54	V	JAMAA	JAMB		
55 LATCH	V123A2	JAMAAA			A
56 RELEASE	V123A3	JAMAAB			A
57 CABLE MECHANISM	V123A4	JAMAAC			A
58 BELLCRANK	V123A5	JAMAAD			A
59 BUNGEE/SPRING	V123A6	JAMAAE			A
60 LINK/ARM	V123A7	JAMAAF			A
FWD CANOPY CLOSED	V	JAMAB	JAMC	JAMA	AAAAAAAAA
62	V	JAMAB	JAMB		
63 LATCH	V123A2	JAMABA			A
64 RELEASE	V123A3	JAMABB			A
65 CABLE MECHANISM	V123A4	JAMABC			A
66 BELLCRANK	V123A5	JAMABD			A

TITLE	WUC	ALPHA	INPUT	DEP FUNC	CD AL SENSITIVITY FC FN W 123456789
67 BUNGEE/SPRING	V123A6	JAMABE			A
68 LINK/ARM	V123A7	JAMABF			A
HI PRESS AIR REG AND DIST	V	JAMC	KGA	JAMAA	AAAAAAAAA
	V	JAMC		JAMAB	AAAAAAAAA
71 RESTRICTOR VALVE	V12311	JAMCA			A
72 SELECTOR VALVE	V12312	JAMCB			A
73 RELIEF VALVE	V12313	JAMCC			A
74 MANIFOLD	V12314	JAMCD			A
75 RETRACT CYLINDER	V12315	JAMCE			A
76 PANEL RELEASE CYLINDER	V12316	JAMCF			A
77 STICK RELEASE CYLINDER	V12317	JAMCG			A
78 PRESSURE OPERATING VALVE	V12318	JAMCH			A
79 SHUTTLE VALVE	V1231A	JAMCJ			A
80 DOUBLE CHECK VALVE	V1231C	JAMCK			A
81 REGULATOR	V1231D	JAMCL			A
CANOPY ACTUATION	V	JAMB	L	JAMAA	AAAAAAAAA
	V	JAMB	KAE	JAMAB	AAAAAAAAA
WING GROUP	V	JBA	JBB	J	AAAAAAAAA
WING TIP	V	JBB	JBC	JBA	055555550
OUTER WING	V	JBC	JBD	JBA	
04	V	JBC	JBE		
ACCESS PANELS/DOORS	V	JBD		JBC	011111110
CENTER WING	V	JBE	JBF	JBA	AAAAAAAAA
ACCESS PANELS/DOORS	V	JBF		JBE	011111110
01*TAIL GROUP	X	JCA	JCB	J	AAAAAAAAA
STABILATOR	X	JCB		JCA	AAAAAAAAA
VERTICAL FIN	X	JCC	JCD	JCA	AAAAAAAAA
RUDDER	X	JCD		JCC	AAAAAAAAA

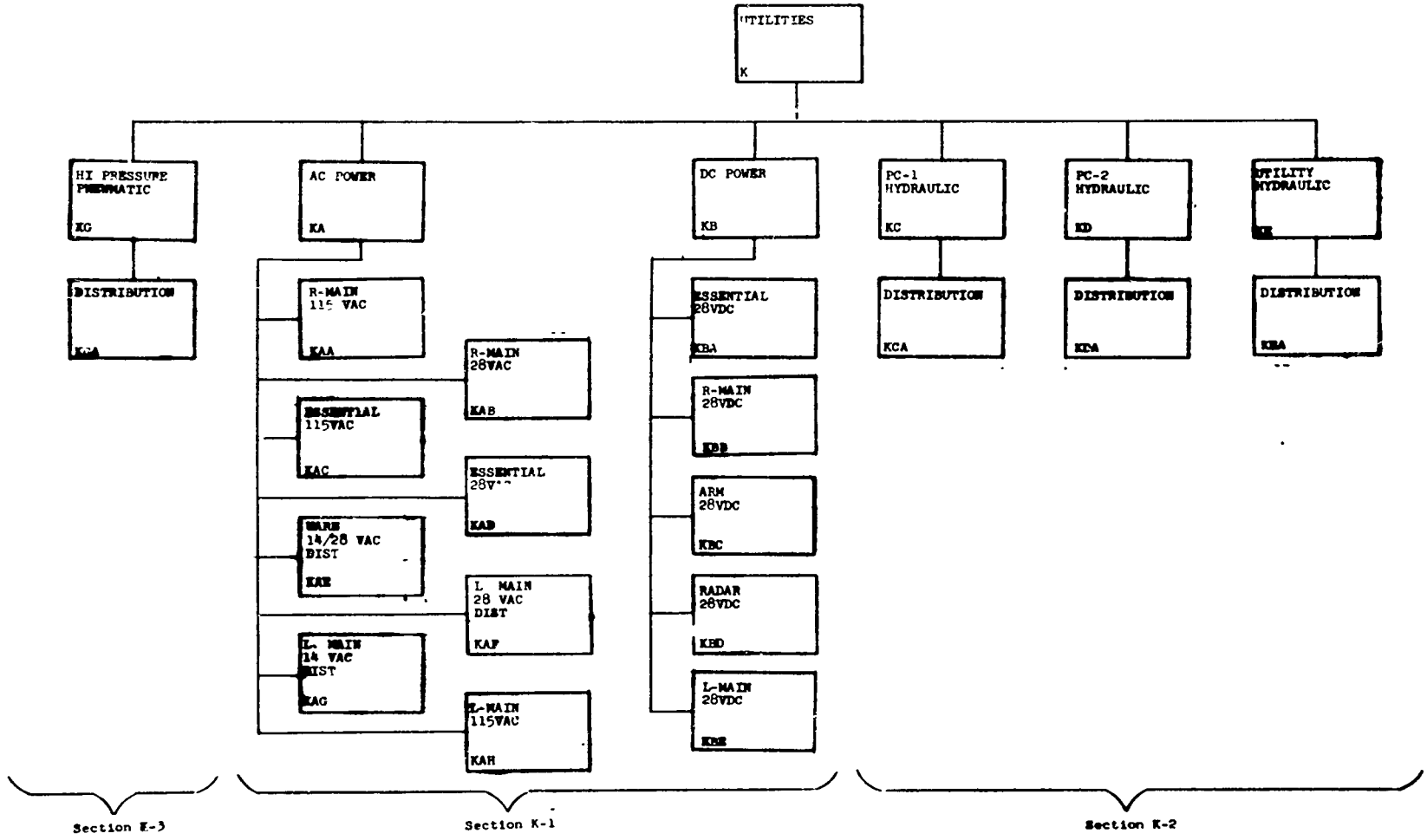

Section K

Aircraft: F-4J	
Title: Functional Diagram UTILITIES SECTION	
Document: NA	**rev. date** NA
Date: 2 Apr 1969	

Revised 20 May 1969

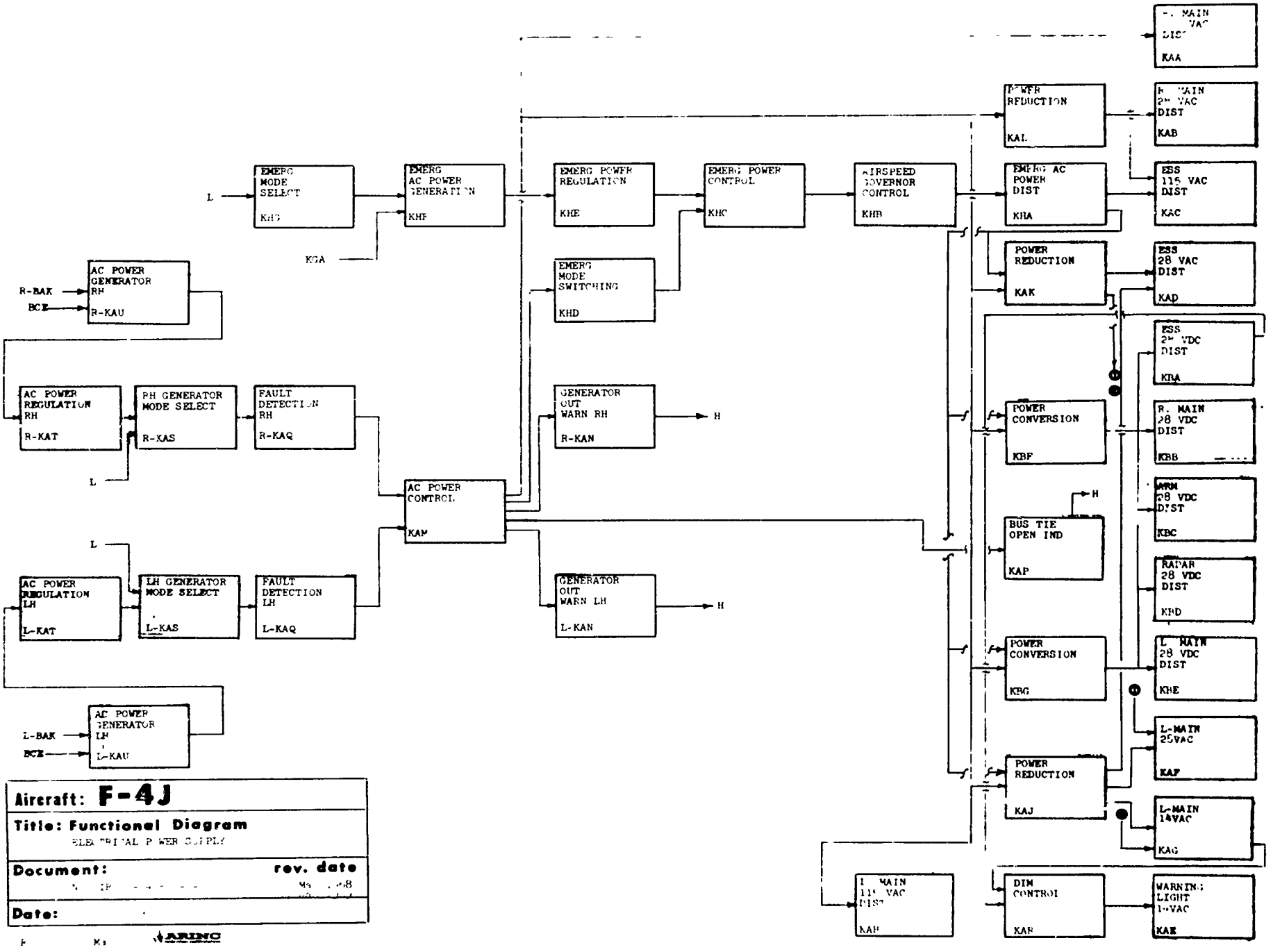
L
EMERG MODE SELECT
KHG
EMERG AC POWER GENERATION
KHF
KGA
EMERG POWER REGULATION
KHE
EMERG POWER CONTROL
KHC
AIRSPEED GOVERNOR CONTROL
KHB
EMERG MODE SWITCHING
KHD
AC POWER GENERATOR RH
R-BAK
BCE
R-KAU
AC POWER REGULATION RH
R-KAT
RH GENERATOR MODE SELECT
R-KAS
FAULT DETECTION RH
R-KAQ
L
GENERATOR OUT WARN RH
R-KAN
H
AC POWER CONTROL
KAM
L
AC POWER REGULATION LH
L-KAT
LH GENERATOR MODE SELECT
L-KAS
FAULT DETECTION LH
L-KAQ
GENERATOR OUT WARN LH
L-KAN
H
AC POWER GENERATOR LH
L-BAK
BCE
L-KAU
POWER REDUCTION
KAL
EMERG AC POWER DIST
KHA
POWER REDUCTION
KAK
POWER CONVERSION
KBF
BUS TIE OPEN IND
KAP
H
POWER CONVERSION
KBG
POWER REDUCTION
KAJ
L MAIN 115 VAC DIST
KAP
DIM CONTROL
KAR
WARNING LIGHT 14VAC
KAR
R. MAIN 28 VAC DIST
KAA
R MAIN 28 VAC DIST
KAB
ESS 115 VAC DIST
KAC
ESS 28 VAC DIST
KAD
ESS 28 VDC DIST
KHA
R. MAIN 28 VDC DIST
KBB
ARM 28 VDC DIST
KBC
RADAR 28 VDC DIST
KBD
L MAIN 28 VDC DIST
KHE
L-MAIN 26VAC
KAF
L-MAIN 14VAC
KAG
Aircraft: F-4J
Title: Functional Diagram
ELECTRICAL POWER SUPPLY
Document:
rev. date
Date:
ARINC

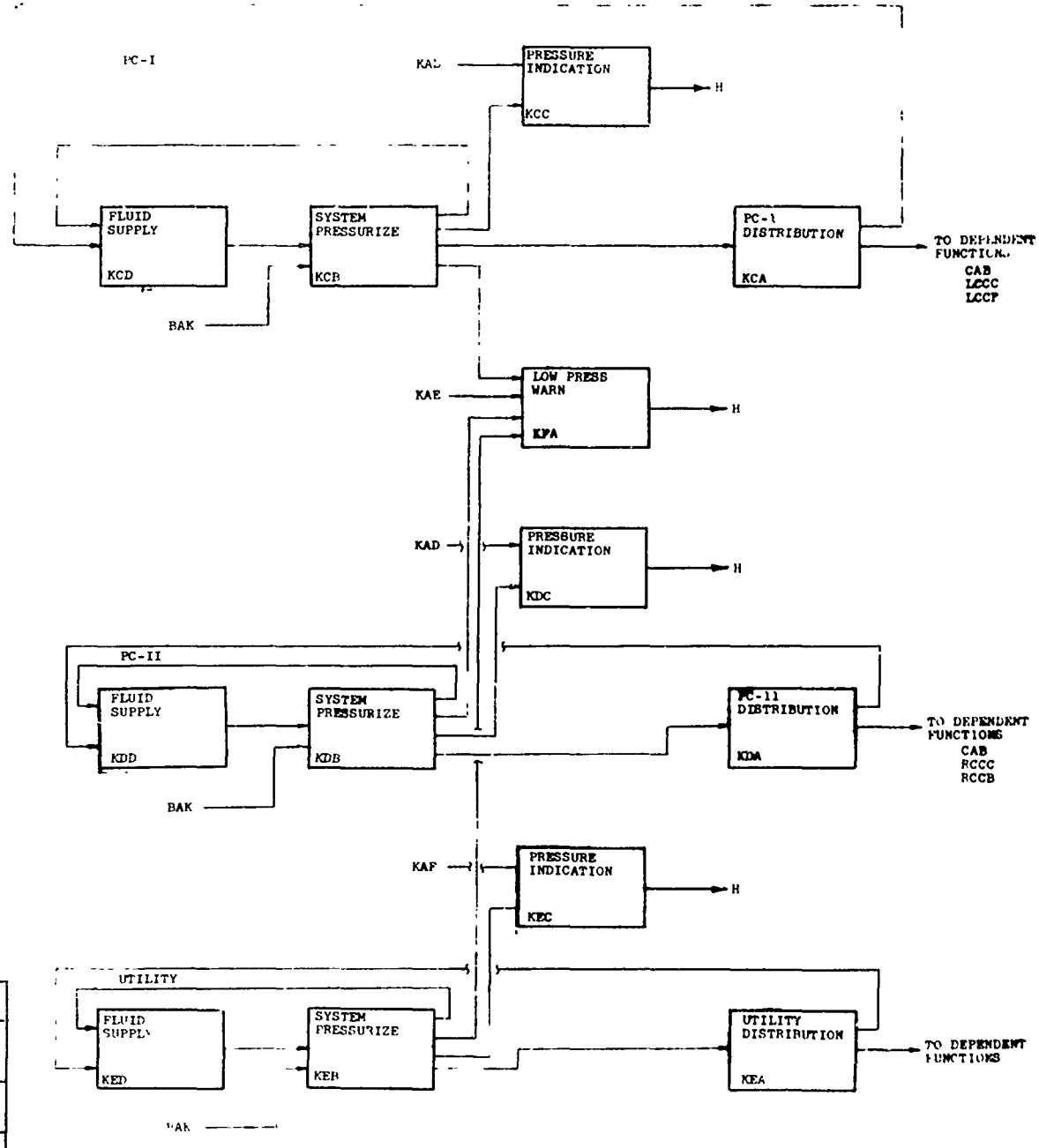

Aircraft: **F-4J**

Title: **Functional Diagram**

[illegible] POWER

Document: [illegible] rev. date [illegible]

Date: [illegible]

Revised [illegible] ARINC

Section R-2

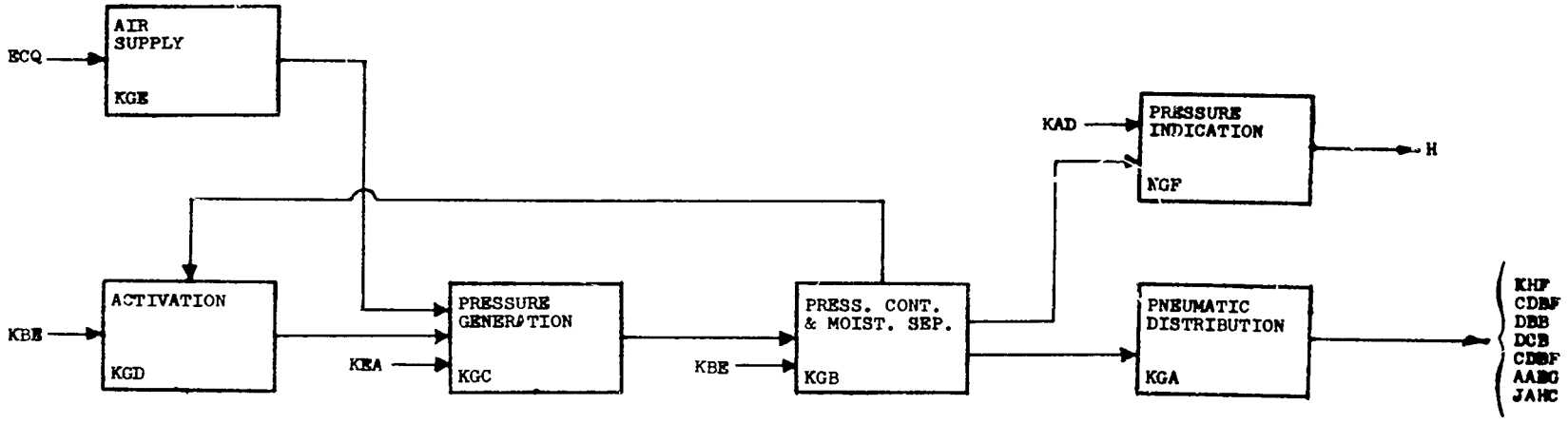

Aircraft: F-4J

Title: Functional Diagram
HI-PRESSURE PNEUMATIC SYSTEM

Document: NAVAIR 01-24[illegible]FDF-2-2.4 **rev. date** 15 Mar 1[illegible]

Date: 23 Apr 1969

Revised 20 May 1969 [illegible]

TITLE	WUC	ALPHA	INPUT	DEP FUNC	CD AL SENSITIVITY FC FN W 123456789
AC POWER CONTROL	Y	KAM	PKAB	KAL	AAAAAAAAA
	Y	KAM	LKAB	KAL	AAAAAAAAA
	Y	KAM		KAC	AAAAAAAAA
	Y	KAM		KAK	AAAAAAAAA
	Y	KAM		KAJ	AAAAAAAAA
	Y	KAM		KAP	AAAAAAAAA
	Y	KAM		KBF	AAAAAAAAA
	Y	KAM		KBG	AAAAAAAAA
	Y	KAM		KAH	AAAAAAAAA
	Y	KAM		KHO	AAAAAAAAA
	Y	KAM		RKAK	AAAAAAAAA
	Y	KAM		LKAK	AAAAAAAAA
06 AC POWER CONTROL BOX	Y42126	KAMA			A
07 GENERATOR CONTROL PANEL	Y42127	KAMB			A
RIGHT MAIN 115 VAC DISTRIB	Y	KAA	KAM	HBH	AAAAAAAAA
	Y	KAA		HDAD	AAAAAAAAA
	Y	KAA		HDAB	AAAAAAAAA
	Y	KAA		GACAE	AAAAAAAAA
	Y	KAA		FBH	AAAAAAAAA
	Y	KAA		FBPB	AAAAAAAAA
	Y	KAA		FBPC	AAAAAAAAA
	Y	KAA		EBPD	AAAAAAAAA
	Y	KAA		EAAD	AAAAAAAAA
	Y	KAA		EAAB	AAAAAAAAA
	Y	KAA		EAAC	AAAAAAAAA
	Y	KAA		AGBA	AAAAAAAAA
	Y	KAA		BBP	AAAAAAAAA
	Y	KAA		BDC	AAAAAAAAA
	Y	KAA		CBX	AAAAAAAAA
	Y	KAA		LCCF	AAAAAAAAA
	Y	KAA		BGBB	AAAAAAAAA
AC BUS	Y4212H	KAAA			A
RIGHT MAIN 28VAC DISTRIB	Y	KAD	KAL	FBH	AAAAAAAAA
	Y	KAD		EEE	AAAAAAAAA
	Y	KAD		GACAE	AAAAAAAAA
	Y	KAD		CBX	AAAAAAAAA
AC BUS	Y4212H	KADA			A
ESSENTIAL 115VAC DISTRIB	Y	KAC	KAM	FRAEC	AAAAAAAAA
ESSENTIAL 115VAC DISTRIB	Y	KAC	KAM	LRAEC	AAAAAAAAA
	Y	KAC	KHA	GACAE	AAAAAAAAA
	Y	KAC		HABA	AAAAAAAAA
	Y	KAC		GABC	AAAAAAAAA
	Y	KAC		EEE	AAAAAAAAA
	Y	KAC		HADD	AAAAAAAAA
	Y	KAC		HADE	AAAAAAAAA
	Y	KAC		HBD	AAAAAAAAA
	Y	KAC		BBB	AAAAAAAAA
	Y	KAC		HACB	AAAAAAAAA
AC BUS	Y4212H	KACA			A
ESSENTIAL 28VAC DISTRIB	Y	KAD	KAK	EEE	AAAAAAAAA

TITLE	WUC	ALPHA	INPUT	DEP FUNC	CD AL SENSITIVITY FC FN W 123456789
	Y	KAD	KAJ	GACAE	AAAAAAAAA
	Y	KAD		BBE	AAAAAAAAA
	Y	KAD		KCC	AAAAAAAAA
	Y	KAD		KOC	AAAAAAAAA
	Y	KAD		RBADE	AAAAAAAAA
	Y	KAD		LRADE	AAAAAAAAA
	Y	KAD		KGF	AAAAAAAAA
	Y	KAD		RBCG	AAAAAAAAA
	Y	KAD		LRCG	AAAAAAAAA
	Y	KAD		CBH	AAAAAAAAA
	Y	KAD		LCCJ	AAAAAAAAA
	Y	KAD		RCCJ	AAAAAAAAA
AC BUS	Y4212H	KADA			A
ESSENTIAL 28VDC DISTRIB	Y	KBA	KBF	CDBJ	AAAAAAAAA
	Y	KBA		RRADB	AAAAAAAAA
	Y	KBA		LRADB	AAAAAAAAA
	Y	KBA	KBG	RBABA	AAAAAAAAA
	Y	KBA	KBG	LRABA	AAAAAAAAA
	Y	KBA		CCH	AAAAAAAAA
	Y	KBA		CAD	AAAAAAAAA
	Y	KBA		KAR	AAAAAAAAA
	Y	KBA		HACD	AAAAAAAAA
	Y	KBA		HADF	AAAAAAAAA
	Y	KBA		GACAE	AAAAAAAAA
	Y	KBA		GABC	AAAAAAAAA
	Y	KBA		GAAD	AAAAAAAAA
	Y	KBA		EEE	AAAAAAAAA
	Y	KBA		LBBA	AAAAAAAAA
	Y	KBA		RBBA	AAAAAAAAA
	Y	KBA		BBN	AAAAAAAAA
	Y	KBA		BBF	AAAAAAAAA
	Y	KBA		BBP	AAAAAAAAA
DC BUS	Y4213B	KBAA			A
RIGHT MAIN 28VDC DISTRIB	Y	KBB	KBF	BBN	AAAAAAAAA
	Y	KBB	KRG	BBC	AAAAAAAAA
	Y	KBB		DAE	AAAAAAAAA
	Y	KBB		EBPC	AAAAAAAAA
	Y	KBB		EBPD	AAAAAAAAA
	Y	KBB		EBAC	AAAAAAAAA
	Y	KBB		EBPB	AAAAAAAAA
	Y	KBB		EAAC	AAAAAAAAA
	Y	KBB		EAAB	AAAAAAAAA
	Y	KBB		EAAF	AAAAAAAAA
	Y	KBB		EAAK	AAAAAAAAA
	Y	KBB		EAAD	AAAAAAAAA
	Y	KBB		EAAJ	AAAAAAAAA
	Y	KBB		DAE	AAAAAAAAA
	Y	KBB		FAE	AAAAAAAAA

TITLE	WUC	ALPHA	INPUT	DEP FUNC	CD AL FC FN	SENSITIVITY W 123456789
	Y	KBD		GAAD		AAAAAAAAA
	Y	KBD		GACAE		AAAAAAAAA
	Y	KBD		HBB		AAAAAAAAA
	Y	KBD		HBC		AAAAAAAAA
	Y	KBD		HBJA		AAAAAAAAA
	Y	KBD		CBF		AAAAAAAAA
	Y	KBD		ABAG		AAAAAAAAA
	Y	KBD		RBEF		AAAAAAAAA
	Y	KBD		LBEF		AAAAAAAAA
	Y	KBD		CDBD		AAAAAAAAA
DC BUS	Y42138	KBDA			A	
ARMAMENT 28VDC DISTRIBUTION	Y	KBC	KBF	GACAE		AAAAAAAAA
	Y	KBC	KBG			
DC BUS	Y42138	KBCA			A	
RADAR 28VDC DISTRIBUTION	Y	KBD	KRF	GACAE		AAAAAAAAA
	Y	KBD	KRG	KBG		AAAAAAAAA
DC BUS	Y42138	KBDA			A	
LEFT MAIN 28VDC DISTRIB	Y	KBE	KRG	KBG		AAAAAAAAA
	Y	KBE	KRF	HBD		AAAAAAAAA
	Y	KBE		HBB		AAAAAAAAA
	Y	KBE		GACAE		AAAAAAAAA
	Y	KBE		FBH		AAAAAAAAA
	Y	KBE		FCC		AAAAAAAAA
	Y	KBE		BBC		AAAAAAAAA
	Y	KRE		BCBD		AAAAAAAAA
	Y	KBE		BCBB		AAAAAAAAA
	Y	KRE		RCBA		AAAAAAAAA
	Y	KBE		KGB		AAAAAAAAA
	Y	KRE		KGD		AAAAAAAAA
	Y	KBE		AACE		AAAAAAAAA
	Y	KBE		ABBC		AAAAAAAAA
	Y	KBE		BCAB		AAAAAAAAA
	Y	KBE		CAE		AAAAAAAAA
DC BUS	Y42138	KBEA			A	
LEFT MAIN 28VAC DISTRIB	Y	KAF	KAJ	FBH		AAAAAAAAA
	Y	KAF	KAK			
AC BUS	Y4212H	KAFA			A	
LEFT MAIN 14VAC DISTRIB	Y	KAG	KAJ	EEE		AAAAAAAAA
	Y	KAG	KAK	KAR		AAAAAAAAA
AC BUS	Y4212H	KAGA			A	
WARNING 14/28VAC DISTRIB	Y	KAE	KAH	AACE		AAAAAAAAA
	Y	KAE		RBCH		AAAAAAAAA
	Y	KAE		LBCH		AAAAAAAAA
	Y	KAE		CDBJ		AAAAAAAAA
	Y	KAE		RBEE		AAAAAAAAA
	Y	KAE		LBEE		AAAAAAAAA
	Y	KAE		ABBF		AAAAAAAAA
	Y	KAE		RBEB		AAAAAAAAA

TITLE	WUC	ALPHA	INPUT	DEP FUNC	CD AL FC FN	SENSITIVITY W 123456789
	Y	KAE		LBEB		AAAAAAAAA
	Y	KAE		KFA		AAAAAAAAA
	Y	KAE		BBP		AAAAAAAAA
	Y	KAE		BBR		AAAAAAAAA
	Y	KAE		BBK		AAAAAAAAA
	Y	KAE		BCBC		AAAAAAAAA
	Y	KAE		EFPD		AAAAAAAAA
	Y	KAE		EBPC		AAAAAAAAA
	Y	KAE		GACAE		AAAAAAAAA
	Y	KAE		EEE		AAAAAAAAA
	Y	KAE		FAK		AAAAAAAAA
	Y	KAE		FCG		AAAAAAAAA
	Y	KAE		HDAF		AAAAAAAAA
	Y	KAE		JAHB		AAAAAAAAA
AC BUS	Y4212H	KAEA			A	
LIGHT DIMING CONTROL	Y	KAR	KBA	KAE		AAAAAAAAA
	Y	KAR	KAG			
LIGHT CONTROL PANEL	Y44112	KARA			A	
LEFT AMIN 115VAC DISTRIB	Y	KAM	KAH	HBD		AAAAAAAAA
	Y	KAM		EEE		AAAAAAAAA
	Y	KAM		FAH		AAAAAAAAA
	Y	KAM		FAG		AAAAAAAAA
	Y	KAM		FAD		AAAAAAAAA
	Y	KAM		FAB		AAAAAAAAA
	Y	KAM		FAC		AAAAAAAAA
	Y	KAM		FAA		AAAAAAAAA
	Y	KAM		GACAE		AAAAAAAAA
	Y	KAM		BBB		AAAAAAAAA
	Y	KAM		BBC		AAAAAAAAA
	Y	KAM		ABAF		AAAAAAAAA
	Y	KAM		RBARC		AAAAAAAAA
	Y	KAM		LBARC		AAAAAAAAA
AC BUS	Y4212H	KAMA			A	
AC POWER CONVERSION	Y	KBF	KAM	KBA		AAAAAAAAA
	Y	KBF	KHA	KBB		AAAAAAAAA
	Y	KBF		KBC		AAAAAAAAA
	Y	KBF		KBD		AAAAAAAAA
	Y	KBF		KBE		AAAAAAAAA
TRANSFORMER RECTIVIER	Y42131	KBFA			A	
AC POWER CONVERSION	Y	KBG	KAM	KBA		AAAAAAAAA
	Y	KBG	KHA	KBB		AAAAAAAAA
	Y	KBG		KBC		AAAAAAAAA
	Y	KBG		KBD		AAAAAAAAA
	Y	KBG		KBE		AAAAAAAAA
TRANSFORMER RECTIFIER	Y42131	KBGA			A	
AC POWER REDUCTION	Y	KAK	KAM	KAD		AAAAAAAAA
	Y	KAK	KHA	KAF		AAAAAAAAA
	Y	KAK		KAG		AAAAAAAAA

	TITLE	WUC	ALPHA	INPUT	DEP FUNC	CD AL SENSITIVITY FC FN W 123456789
	28VAC AUTO TRANSFORMER	Y42120	KAKA			A
	AC POWER DISTRIBUTION	Y	KAJ	KAI	KAD	AAAAAAAAA
		Y	KAJ	KMA	KAF	AAAAAAAAA
		Y	KAJ		KAC	AAAAAAAAA
	28VAC AUTO TRANSFORMER	Y42120	KAJA			A
	BUS TIE OPEN INDICATION	Y	KAP	KA	H	011111110
64	BUS TIE OPEN LIGHT	Y42120	KAPA			1
	R GENERATOR OUT WARNING	Y	RKAN	KA	H	011111110
66	R GENERATOR WARNING LIGHT	Y4212N	RKANA			1
	L GENERATOR OUT WARNING	Y	LKAN	KA	H	011111110
67	L GENERATOR WARNING LIGHT	Y4212N	LKANA			1
	R GENERATOR FAULT DETECTION	Y	RKAB	RKAT	KAM	AAAAAAAAA
	GENERATOR CONTROL PANEL	Y42127	KAMB			A
	L GENERATOR FAULT DETECTION	Y	LKAB	LKAT	KAM	AAAAAAAAA
	GENERATOR CONTROL PANEL	Y42127	KAMB			A
	R GENERATOR MODE SELECT	Y	RKAS	RKAT	RKAQ	AAAAAAAAA
		Y	RKAS	L		
	PILOT GENERATOR CONT PANEL	Y42122	KASA			A
	L GENERATOR MODE SELECT	Y	LKAS	LKAT	LKAQ	AAAAAAAAA
		Y	LKAS	L		
	PILOT GENERATOR CONT PANEL	Y42122	KASA			A
	R GEN POWER REGULATION	Y	RKAT	RKAI	RKAS	AAAAAAAAA
	R VOLTAGE REG SUPERV PANEL	Y4212*	RKATA			A
	R STATIC EXCITER REGULATOR	Y42125	RKATB			A
	L GEN POWER REGULATION	Y	LKAT	LKAI	LKAS	AAAAAAAAA
	L VOLTAGE REG SUPERV PANEL	Y4212*	LKATA			A
	L STATIC EXCITER REGULATOR	Y4212*	LKATB			A
	R AC POWER GENERATION	Y	RKAU	RKAA	KAT	444444444
		Y	RKAU	BCI		
	RH GENERATOR	Y42121	RKAUA			A
	RH CONSTANT SPEED DRIVE	Y42210	RKAUB			A
	L AC POWER GENERATION	Y	LKAU	LKAA	LKAT	444444444
	LH GENERATOR	Y42121	LKAUA			A
		Y	LKAU	BCL		
	LH CONSTANT SPEED DRIVE	Y42210	LKAUB			A
	*EMERG AC POWER DISTRIBUTION	Y	KHA	KHB	KAC	K KA AAAAAAAAA
		Y	KHA		KAK	AAAAAAAAA
		Y	KHA		KBF	AAAAAAAAA
		Y	KHA		KBG	AAAAAAAAA
		Y	KHA		KAJ	AAAAAAAAA
	AIRSPEED GOVERNOR CONTROL	Y	KHB	KHC	KHA	AAAAAAAAA
93	AIRSPEED SWITCH	Y42143	KHBA			A
	EMERGENCY POWER CONTROL	Y	KHC	KHE	KHA	AAAAAAAAA
95		Y	KHC	KHD		
96	GENERATOR LOAD/FREQ CONTROL	Y42144	KHCA			A
97	ESSENTIAL LINE CONTROL	Y42145	KHCB			A
	EMERGENCY MODE SWITCHING	Y	KHD	KAM	KHC	AAAAAAAAA
98	EMERGENCY GEN CONTACTOR	Y42146	KHDA			A

	TITLE	WUC	ALPHA	INPUT	DEP FUNC	CD AL SENSITIVITY FC FN W 123456789
	EMERG POWER REGULATION	Y	KHE	KHF	KHC	AAAAAAAAA
A1	EMERG CONTROL REGULATOR	Y42142	KHEA			A
	EMERG AC POWER GENERATION	Y	KHF	KHG	KHE	AAAAAAAAA
A3		Y	KHF	KCA		
A4	EMERGENCY GENERATOR	Y42141	KHFA			A
A5	RAM AIR TURBINE	Y4532700	KHFB			A
A6	PNEUMATIC SEQUENCE VALVE	Y45321	KHFC			A
A7	RAT DOOR CYLINDER LH	Y45322	KHFD			A
A8	RAT DOOR CYLINDER RH	Y45322	KHFE			A
A9	RAT ACTUATOR CYLINDER	Y45323	KHFF			A
B0	RAT ACTUATOR	Y45325	KHFG			A
B1	POWER UNIT STRUT	Y4532730	KHFH			A
B2	SWIVEL ASSEMBLY	Y4532C	KHFJ			A
	EMERGENCY MODE SELECT	Y	KHG	L	KHF	AAAAAAAAA
B4	MANUAL OPERATING VALVE	Y45311	KHGA			A
B5	RELEASE HADLE	Y45312	KHGB			A
B6	RELEASE MECHANISM	Y45313	KHGC			A
B7	EXTENSION MECHANISM	Y45320	KHGD			A
	*POWER CONTROL I DISTRIBUTE	Z	KCA	KCH	KCD	AAAAAAAAA
		Z	KCA		CAR	555555555
		Z	KCA		LCGC	555555555
		Z	KCA		LCCR	555555555
C4	MANIFOLD	Z45114	KCAA			A
C5	FILTER, STABILATOR	Z45110	KCAB			3
C6	FILTER,SPOILER + AILERON LH	Z45110	KCAC			3
C7	MANIFOLD CHECK VALVE	Z4511*	KCAD			A
C8	STABILATOR CHECK VALVE	Z4511*	KCAE			A
	SYSTEM PRESSURIZATION	Z	KCB	KCJ	KCA	AAAAAAAAA
		Z	KCB	BAK	KCC	AAAAAAAAA
		Z	KCB		KFA	AAAAAAAAA
		Z	KCB		KCD	AAAAAAAAA
12	HYDRAULIC PUMP	Z45112	KCBA			A
13	ACCUMULATOR	Z45115	KCBB			A
14	ACCUMULATOR GAGE	Z45114	KCBC			5
15	SYSTEM RELIEF VALVE	Z45116	KCBD			A
16	SURGE SUPPRESSOR	Z4511*	KCBE			2
	FLUID SUPPLY	Z	KCD	KCB	KCB	AAAAAAAAA
18		Z	KCD	KCA		
19	RESERVOIR	Z45113	KCDA			A
20	BLEED VALVE	Z4511*	KCDB			A
21	HYD/FUEL RADIATOR	Z45118	KCDC			A
22	FILTER	Z4511C	KCDD			3
23	RESERVOIR CHECK VALVE	Z4511*	KCDE			A
24	PUMP CASE DRAIN CHECK VALVE	Z4511*	KCDF			A
25	RADIATOR CHECK VALVE	Z4511*	KCDG			A
26	LH AILERON CHECK VALVE	Z4511*	KCDH			A
27	STABILATOR CHECK VALVE	Z4511*	KCDJ			A
	PC I PRESSURE INDICATION	Z	KCC	KCH	H	022222220

	TITLE	WUC	ALPHA	INPUT	DEP FUNC	CD AL FC FN	SENSITIVITY M 123456789
29		Z	KCC	KAD			
	HYDRAULIC FUSE	Z5101•	KCCA			A	
	PRESSURE TRANSMITTER	Z51012	KCCB			A	
	PRESSURE INDICATOR	Z51011	KCCC			A	
	SNUBBER	Z5101•	KCCD			A	
	5 AMP CIRCUIT BREAKER	Z4219•	KCCE			A	
	•POWER CONTROL II DISTRIBUTE		KDA	KDH	KDD		AAAAAAAAA
		Z	KDA		CAR		999999999
		Z	KDA		•CCC		999999999
		Z	KDA		•CCR		999999999
37	MANIFOLD	Z49126	KDAA			A	
38	FILTER, STABILATOR	Z49127	KDAB			3	
39	FILTER,SPOILER • AILERON RG	Z49127	KDAC			3	
	MANIFOLD CHECK VALVE	Z491••	KDAD			A	
	STABILATOR CHECK VALVE	Z491••	KDAE			A	
	SYSTEM PRESSURIZATION	Z	KDB	KDD	KFA		AAAAAAAAA
		Z	KDB	BAK	KDC		AAAAAAAAA
		Z	KDB		KDA		AAAAAAAAA
		Z	KDB		KDD		AAAAAAAAA
46	HYDRAULIC PUMP	Z49122	KDBA			A	
47	ACCUMULATOR	Z49123	KDBB			A	
48	ACCUMULATOR GAGE	Z49124	KDBC			5	
49	SYSTEM RELIEF VALVE	Z4912•	KDBD			A	
50	SURGE SUPPRESSOR	Z4912•	KDBE			2	
	FLUID SUPPLY	Z	KDD	KDB	KDA		AAAAAAAAA
52		Z	KDD	KDA			
53	RESERVOIR	Z49124	KDDA			A	
54	BLEED VALVE	Z4912•	KDDB			A	
55	HYD/FUEL RADIATOR	Z49128	KDDC			A	
56	FILTER	Z49127	KDDD			3	
57	RESERVOIR CHECK VALVE	Z4912•	KDDE			A	
58	PUMP CASE DRAIN CHECK VALVE	Z4912•	KDDF			A	
59	RADIATOR CHECK VALVE	Z4912•	KDDG			A	
60	RH AILERON CHECK VALVE	Z4912•	RDDH			A	
61	STABILATOR CHECK VALVE	Z4912•	KDDJ			A	
	PC II PRESSURE INDICATION	Z	KDC	KDU	H		022222220
63		Z	KDC	KAD			
	HYDRAULIC FUSE	Z5101•	KDCA			A	
	PRESSURE TRANSMITTER	Z51014	KDCB			A	
	PRESSURE INDICATOR	Z51013	KDCC			A	
	SNUBBER	Z5101•	KDCD			A	
	5 AMP CIRCUIT BREAKER	Z5101•	KDCE			A	
	LOW PRESSURE WARNING	Z	KFA	KCU	H		011111110
69		Z	KFA	KDU			
70		Z	KFA	KED			
71		Z	KFA	KAF			
72	PC I PRESSURE SWITCH	Z49117	KFAA			A	
73	PC II PRESSURE SWITCH	Z49129	KFAB			A	

	TITLE	WUC	ALPHA	INPUT	DEP FUNC	CD AL FC FN	SENSITIVITY M 1234567A9
74	WARNING LIGHT	Z4512•	KFAC			A	
75	5 AMP CIRCUIT BREAKER	Z4219•	KFAD			A	
	•UTILITY HYD DISTRIBUTION	Z	KEA	KEB	KED		AAAAAAAAA
		Z	KEA		DAC		AAAAAAAAA
		Z	KEA		LCCD		AAAAAAAAA
		Z	KEA		RREC		AAAAAAAAA
		Z	KEA		LREC		AAAAAAAAA
		Z	KEA		RRFC		AAAAAAAAA
		Z	KEA		LRFC		AAAAAAAAA
		Z	KFA		ABC		AAAAAAAAA
		Z	KEA		KGC		AAAAAAAAA
		Z	KEA		CBD		AAAAAAAAA
		Z	KEA		BDC		AAAAAAAAA
		Z	KEA		AABD		AAAAAAAAA
		Z	KEA		CBB		AAAAAAAAA
		Z	KEA		CDRC		AAAAAAAAA
		Z	KEA		AACB		AAAAAAAAA
		Z	KEA		ABBB		AAAAAAAAA
		Z	KEA		CEC		AAAAAAAAA
		Z	KEA		BBP		AAAAAAAAA
		Z	KEA		LCCB		AAAAAAAAA
		Z	KEA		RCCB		AAAAAAAAA
		Z	KFA		RCCD		AAAAAAAAA
		Z	KFA		RCCC		AAAAAAAAA
		Z	KEA		CBF		AAAAAAAAA
		Z	KFA		LCCC		AAAAAAAAA
		Z	KEA		ABAC		AAAAAAAAA
94	LH AILERON/SPOILER FILTER	Z4513G	KEAA			3	
95	RH AILERON/SPOILER FILTER	Z4513G	KFAB			3	
96	RUDDER FILTER	Z4513G	KFAC			3	
97	MANIFOLD	Z49134	KEAD			A	
98	MANIFOLD CHECK VALVE	Z4513•	KEAE			A	
99	MANIFOLD FILTER	Z4513G	KEAF			3	
A3	FILTER CHECK VALVE	Z4513•	KEAG			A	
	SYSTEM PRESSURIZATION	Z	KFB	KFD	KED		AAAAAAAAA
		Z	KEB	BAK	KEC		AAAAAAAAA
		Z	KEB		KEA		AAAAAAAAA
		Z	KEB		KFA		AAAAAAAAA
A5	LH HYDRAULIC PUMP	Z4513C	KEBA			5	
A6	RH HYDRAULIC PUMP	Z4513C	KEBB			5	
A7	SYSTEM ACCUMULATOR	Z4513D	KEBC			A	
A8	ACCUMULATOR GAGE	Z49135	KEBD			A	
A9	SYSTEM RELIEF VALVE	Z49131	KEBE			A	
B0	LH PUMP CHECK VALVE	Z4513•	KEBF			A	
H1	RH PUMP CHECK VALVE	Z4513•	KEBG			A	
B2	LH SURGE SUPPRESSOR	Z4513•	KEBH			2	
B3	RH SURGE SUPPRESSOR	Z4513•	KEBJ			2	
	FLUID SUPPLY	Z	KED	KFA	KEB		AAAAAAAAA

	TITLE	WUC	ALPHA	INPUT	DEP FUNC	CD AL FC FN	SENSITIVITY M 123456789
85		Z	KED	KEH			
86	RESERVOIR	Z49134	KEDA			A	
87	RESERVOIR BLEED VALVE	Z4913•	KEDB			A	
88	LH HYD/FUEL RADIATOR	Z49136	KEDC			A	
89	RH HYD/FUEL RADIATOR	Z49136	KEDD			A	
C0	RADIATOR RELIEF VALVE	Z4913•	KEDE			A	
C1	LH PUMP CASE DRAIN FILTER	Z4913G	KEDF			3	
C2	RH PUMP CASE DRAIN FILTER	Z4913G	KEDG			3	
C3	CASE DRAIN CHECK VALVE	Z4913•	KEDH			A	
C4	MANIFOLD FILTER	Z4913G	KEDJ			3	
C5	MANIFOLD FILTER	Z4913G	KEDK			3	
C6	MANIFOLD CHECK VALVE	Z4913•	KEDL			A	
C7	MANIFOLD CHECK VALVE	Z4913•	KEDM			A	
	PRESSURE INDICATION	Z	KEC	KFH	M		011111110
		Z	KEC	KAF			
	5 AMP CIRCUIT BREAKER	Z4219•	KECA			A	
	HYDRAULIC FUSE	Z4913•	KECB			A	
	SNUBBER	Z4913•	KECD			A	
	PRESSURE TRANSMITTER	Z51016	KECE			A	
	PRESSURE GAGE	Z51015	KECF			A	
	PNEUMATICS DISTRIBUTION	•	KGA	KGH	KHF		AAAAAAAAA
		•	KGA		QBR		AAAAAAAAA
		•	KGA		PCR		AAAAAAAAA
		•	KGA		JAMC		011111110
		•	KGA		CDBF		AAAAAAAAA
		•	KGA		?ABC		AAAAAAAAA
07	GROUND CHARGING AIR VALVE	•45216	KGAA			1	
08	AIR VALVE FILTER	•4521D	KGAB			1	
	PRESS CONT/MOIST SEPARATOR	•	KGB	KBL	KGA		AAA1AAAAA
		•	KGB	KCC	KGF		AAAAAAAAA
		•	KGB		KGD		AAAAAAAAA
12	MOISTURE SEPARATOR	•45211	KGBA			8	
13	CHEMICAL DRIER	•4521B	KGBB			4	
14	PRESSURE SENSING SWITCH	•4521•	KGBC			A	
15	VENT VALVE	•4521•	KGBD			A	
16	DUMP VALVE	•4521•	KGBE			A	
17	SAFETY VALVE	•4521F	KGBF			A	
	PRESSURE GENERATION	•	KGC	KGU	KGB		AAAAAAAAA
19		•	KGC	KEA			
20		•	KGC	KGE			
21	HYD DRIVE COMPRESSOR	•4521C	KGCA			A	
22	HYDRAULIC MOTOR	•4521E	KGCB			A	
23	CASE DRAIN CHECK VALVE	•452••	KGCC			A	
	SYSTEM ACTIVATION	•	KGD	KRE	KGC		AAAAAAAAA
25		•	KGD	KGU			
26	SELECTOR VALVE	•45215	KGDA			A	
27	FLOW REGULATOR	•452••	KGDB			A	
28	DOOR NO 22 SWITCH	•452••	KGDC			A	

	TITLE	WUC	ALPHA	INPUT	DEP FUNC	CD AL FC FN	SENSITIVITY M 123456789
29	DOOR NO 23 SWITCH	•452••	KGDD			A	
30	5 AMP CIRCUIT BREAKER	•452••	KGDE			A	
	AIR SUPPLY	•	KGE	ECU	KGC		AAAAAAAAA
32	CHECK VALVE AND FILTER	•452••	KGEA			A	
33	ABSOLUTE PRESSURE REGULATOR	•45216	KGEB			A	
	PRESSURE INDICATION	•	KGF	KGH	M		011111110
35		•	KGF	KAU			
	5 AMP CIRCUIT BREAKER	•452••	KGFA			A	
	AIR PRESSURE GAGE	•51021	KGFB			A	
	PRESSURE INDICATOR	•51022	KGFC			A	
	PRESSURE TRANSMITTER	•51023	KGFD			A	

APPENDIX B

EQUIPMENT SAFETY CRITICALITY PRINTOUT

This appendix contains the flight-safety criticality assessment for the F-4J aircraft.

These criticalities are based on the combined failure data for May 1968 through April 1969, the flight history for the same period, the sensitivity values for each Work Unit Code's functional path, and the weighting factors applicable to the distribution of system failure probability derived from the VF-121 data collection effort.

All conditional or provisory factors were set to zero for this model exercise. The criticalities therefore are based on VFR daylight mission with field takeoff and landing in which backup (emergency) systems are available but not needed. This appendix is divided into two sections, the first ranking WUC's by their criticality, and the second listing the same information but sorted according to WUC.

The format used in the printout shows the WUC on the left followed by the name, the criticality in each mission phase, and finally the total criticality.

In cases where there are more than one alpha designator (more than one part having the same WUC), the name is listed with the applicable alpha designator; its criticalities are shown for each mission phase; and the combined criticalities for all alphas having that WUC are shown on the line in which the WUC is listed.

Mission phases are numbered in accordance with the footnote on page 2-5 of the report.

WUC	ALPHA	WUC-TITLE	CRITICALITIES BY FLIGHT PHASE PH1	PH2	PH3	PH4	PH5	PH6	PH7	PH8	PH9	TOTAL CRIT	CRIT RANK
1111410	JAJB R		.00004	.00004	.00004	.00004	.00004	.00004	.00004	.00004	.00004	.00036	155
1111420	JAJC L	SIDE PANELS	.00006	.00006	.00006	.00006	.00006	.00006	.00006	.00006	.00006	.00054	128
1118400	JAJA	CANOPY	.00156	.00156	.00156	.00156	.00156	.00156	.00156	.00156	.00156	.01404	17
11311	BDAA	FORWARD RAMP	.00000	.00013	.00004	.00005	.00005	.00005	.00002	.00002	.00000	.00036	154
11331			.00248	.00960	.00454	.00458	.00466	.00478	.00456	.00648	.00262	.04430	5
11331	BEAA L	AUXILLIARY AIR DOOR	.00124	.00480	.00228	.00230	.00234	.00240	.00228	.00323	.00131	.02218	
11331	BEAA R	AUXILLIARY AIR DOOR	.00124	.00480	.00226	.00228	.00232	.00238	.00228	.00325	.00131	.02212	
11333			.00026	.00000	.00000	.00000	.00000	.00000	.00000	.00000	.00048	.00074	117
11333	BEBA L	WARNING LIGHT	.00013	.00000	.00000	.00000	.00000	.00000	.00000	.00000	.00024	.00037	
11333	BEBA R	WARNING LIGHT	.00013	.00000	.00000	.00000	.00000	.00000	.00000	.00000	.00024	.00037	
11334			.00020	.00078	.00032	.00032	.00032	.00032	.00030	.00065	.00022	.00343	51
11334	BEDA L	AUX AIR DOOR SELECTOR VALVE	.00010	.00039	.00016	.00016	.00016	.00016	.00015	.00032	.00011	.00171	
11334	BEDA R	AUX AIR DOOR SELECTOR VALVE	.00010	.00039	.00016	.00016	.00016	.00016	.00015	.00033	.00011	.00172	
123A2	JAHABA	LATCH	.00000	.00004	.00014	.00018	.00018	.00018	.00016	.00004	.00000	.00092	101
123A3	JAHAAB	RELEASE	.00000	.00010	.00036	.00046	.00046	.00046	.00040	.00010	.00000	.00234	62
123A4	JAHABC	CABLE MECHANISM	.00000	.00002	.00004	.00006	.00006	.00006	.00006	.00002	.00000	.00032	161
1231A	JAHCJ	SHUTTLE VALVE	.00000	.00002	.00008	.00010	.00010	.00010	.00008	.00002	.00000	.00050	134
12311	JAHCA		.00000	.00000	.00002	.00004	.00004	.00004	.00002	.00000	.00000	.00016	191
12312	JAHCB		.00000	.00002	.00006	.00006	.00006	.00006	.00006	.00002	.00000	.00034	159
12313	JAHCC	RELIEF VALVE	.00000	.00002	.00004	.00006	.00006	.00006	.00006	.00002	.00000	.00032	160
12310	JAHCL		.00000	.00006	.00022	.00028	.00028	.00028	.00024	.00006	.00000	.00142	80
12315	JAHCE	RETRACT CYLINDER	.00000	.00004	.00012	.00016	.00016	.00016	.00014	.00004	.00000	.00082	113
12318	JAHCH	PRESSURE OPERATING VALVE	.00000	.00002	.00004	.00006	.00006	.00006	.00006	.00002	.00000	.00032	162
13111			.00165	.00170	.00167	.00167	.00165	.00167	.00167	.00234	.00165	.01567	15
13111	DAEA	LANDING GEAR CONTROL HANDLE	.00165	.00170	.00167	.00167	.00165	.00167	.00167	.00234	.00165	.01567	
13111	DBDA	LANDING GEAR CONTROL HANDLE	.00000	.00000	.00000	.00000	.00000	.00000	.00000	.00000	.00000	.00000	
13112	DADB	LANDING GEAR HANDLE SWITCH	.00156	.00178	.00152	.00153	.00153	.00153	.00152	.00165	.00160	.01422	16
13121	DACA	LANDING GEAR SELECTOR VALVE	.00134	.00135	.00134	.00134	.00134	.00134	.00134	.00135	.00134	.01208	20
13142			.00000	.00002	.00000	.00000	.00000	.00000	.00000	.00000	.00000	.00002	274
13142	DAAAACL	LMLG DOWN LIMIT SWITCH	.00000	.00000	.00000	.00000	.00000	.00000	.00000	.00000	.00000	.00000	
13142	DAAAACR	R MAIN GEAR DWN LIMIT SW	.00000	.00002	.00000	.00000	.00000	.00000	.00000	.00000	.00000	.00002	
13142	DABABCL	LMLG DOWN LIMIT SWITCH	.00000	.00000	.00000	.00000	.00000	.00000	.00000	.00000	.00000	.00000	
13142	DABABCR	RMLG DOWN LIMIT SWITCH	.00000	.00000	.00000	.00000	.00000	.00000	.00000	.00000	.00000	.00000	
13143	DAABAA	NOSE GEAR DWN LIMIT SWITCH	.00010	.00027	.00008	.00008	.00008	.00008	.00008	.00044	.00010	.00131	84
13145			.00000	.00002	.00000	.00000	.00000	.00000	.00000	.00002	.00000	.00004	242
13145	DAAAAQ		.00000	.00000	.00000	.00000	.00000	.00000	.00000	.00000	.00000	.00000	
13145	DAAAAQL		.00000	.00000	.00000	.00000	.00000	.00000	.00000	.00000	.00000	.00000	
13145	DAAAAQR	R MAIN GEAR SCISSORS SWITCH	.00000	.00002	.00000	.00000	.00000	.00000	.00000	.00002	.00000	.00004	
13145	DAAAQ R	RMLG SCISSORS SWITCH	.00000	.00000	.00000	.00000	.00000	.00000	.00000	.00000	.00000	.00000	
13145	DABABQL		.00000	.00000	.00000	.00000	.00000	.00000	.00000	.00000	.00000	.00000	
13145	DABABQR	RMLG SCISSORS SWITCH	.00000	.00000	.00000	.00000	.00000	.00000	.00000	.00000	.00000	.00000	
13145	DABADQL	LMAIN GEAR SCISSORS SW	.00000	.00000	.00000	.00000	.00000	.00000	.00000	.00000	.00000	.00000	
13152	DBAA	LG EMER AIR SELECTOR VALVE	.00240	.00240	.00240	.00240	.00240	.00240	.00240	.00248	.00240	.02168	8
13153	DBBC	100 CU IN AIR BOTTLE	.00192	.00192	.00192	.00192	.00192	.00192	.00192	.00200	.00192	.01736	14
13210	DABABEL	LMLG SIDEBRACE ACTUATOR	.00010	.00010	.00010	.00010	.00010	.00010	.00010	.00010	.00010	.00090	106
13211			.00064	.00064	.00064	.00064	.00064	.00064	.00064	.00068	.00064	.00580	36
13211	DAAAAAL		.00016	.00016	.00016	.00016	.00016	.00016	.00016	.00018	.00016	.00146	
13211	DAAAAAR	RMLG SHOCK STRUT	.00016	.00016	.00016	.00016	.00016	.00016	.00016	.00018	.00016	.00146	

CRITICALITY ORDERED BY WORK UNIT CODE (PAGE 2 OF 12)

WUC	ALPHA	WUC-TITLE	CRITICALITIES BY FLIGHT PHASE PH1	PH2	PH3	PH4	PH5	PH6	PH7	PH8	PH9	TOTAL CRIT	CRIT RANK
13211	DABABAL	LMLG SHOCK STRUT	.00016	.00016	.00016	.00016	.00016	.00016	.00016	.00016	.00016	.00144	
13211	DABABAR	RMLG SHOCK STRUT	.00016	.00016	.00016	.00016	.00016	.00016	.00016	.00016	.00016	.00144	
13212	DABABBR	RMLG SHRINK MECHANISM	.00024	.00024	.00024	.00024	.00024	.00024	.00024	.00024	.00024	.00220	64
13210			.00016	.00016	.00016	.00016	.00016	.00016	.00016	.00016	.00016	.00144	79
13210	DAAAAER	RMLG SIDEBRACE ACTUATOR	.00008	.00008	.00008	.00008	.00008	.00008	.00008	.00008	.00008	.00072	
13210	DABABER	RMLG SIDEBRACE ACTUATOR	.00008	.00008	.00008	.00008	.00008	.00008	.00008	.00008	.00008	.00072	
13232			.00022	.00022	.00022	.00022	.00022	.00022	.00022	.00022	.00022	.00198	67
13232	DAAABCL	LMLG INBD DOOR BELLCRANK	.00010	.00010	.00010	.00010	.00010	.00010	.00010	.00010	.00010	.00090	
13232	DAAABCR	RMLG INBD DOOR BELLCRANK	.00010	.00010	.00010	.00010	.00010	.00010	.00010	.00010	.00010	.00090	
13232	DABAADL	LMLG INBD DOOR BELLCRANK	.00001	.00001	.00001	.00001	.00001	.00001	.00001	.00001	.00001	.00009	
13232	DABAADR	RMLG INBD DOOR BELLCRANK	.00001	.00001	.00001	.00001	.00001	.00001	.00001	.00001	.00001	.00009	
13234			.00032	.00032	.00032	.00032	.00032	.00032	.00032	.00032	.00032	.00292	55
13234	DAAAAPL	LMLG STRUT DOOR	.00008	.00008	.00008	.00008	.00008	.00008	.00008	.00010	.00008	.00074	
13234	DAAAAPR	RMLG STRUT DOOR	.00008	.00008	.00008	.00008	.00008	.00008	.00008	.00010	.00008	.00074	
13234	DABABDR	RMLG STRUT DOOR	.00008	.00008	.00008	.00008	.00008	.00008	.00008	.00008	.00008	.00072	
13234	DABABPL	LMLG STRUT DOOR	.00008	.00008	.00008	.00008	.00008	.00008	.00008	.00008	.00008	.00072	
13321			.00026	.00026	.00026	.00026	.00026	.00026	.00026	.00026	.00026	.00234	61
13321	DAABAG	NLG UPLOCK ACTUATOR	.00024	.00024	.00024	.00024	.00024	.00024	.00024	.00024	.00024	.00216	
13321	DABBAA	NLG UPLOCK ACTUATOR	.00002	.00002	.00002	.00002	.00002	.00002	.00002	.00002	.00002	.00018	
1334A	ABADA	SELECTOR VALVE	.00000	.00002	.00000	.00000	.00000	.00000	.00000	.00002	.00000	.00004	241
13341	ABAHA	POWER UNIT COMPENSATOR	.00001	.00006	.00000	.00000	.00000	.00000	.00000	.00005	.00001	.00013	200
1334L	ABAGA	NOSE WHEEL STEERING SWITCH	.00003	.00003	.00000	.00000	.00000	.00000	.00000	.00003	.00000	.00006	240
13343	ABAFA	CONTROL UNIT	.00001	.00009	.00000	.00000	.00000	.00000	.00000	.00008	.00001	.00019	182
13346	ABACE	FILTER ASSY	.00000	.00001	.00000	.00000	.00000	.00000	.00000	.00001	.00000	.00002	275
13347	ABABA	FOLLOW UP POTENTIOMETER	.00020	.00163	.00000	.00000	.00000	.00000	.00000	.00143	.00020	.00346	50
13425	AABDB	ACCUMULATOR	.00005	.00005	.00005	.00005	.00005	.00005	.00005	.00005	.00005	.00045	137
13511	AACAB	VERTICAL DAMPER CYLINDER	.00000	.00002	.00000	.00000	.00000	.00000	.00000	.00001	.00000	.00003	255
13515	AACAG	AIR-OIL MANIFOLD	.00000	.00001	.00000	.00000	.00000	.00000	.00000	.00000	.00000	.00001	277
14115	CCHC	TRIM SWITCH	.00000	.00036	.00017	.00016	.00016	.00016	.00016	.00033	.00000	.00150	78
14119	CCGB L	LINKAGE	.00000	.00004	.00001	.00001	.00001	.00001	.00001	.00003	.00000	.00012	201
14210	CCAA R	RIGHT AILERON ASSY	.00000	.00010	.00006	.00006	.00006	.00006	.00006	.00010	.00000	.00050	133
14221			.00000	.00004	.00000	.00000	.00000	.00000	.00000	.00004	.00000	.00008	217
14221	CCDA L	DAMPER CYLINDER ASSY	.00000	.00002	.00000	.00000	.00000	.00000	.00000	.00002	.00000	.00004	
14221	CCDA R	DAMPER CYLINDER ASSY	.00000	.00002	.00000	.00000	.00000	.00000	.00000	.00002	.00000	.00004	
14262			.00000	.00012	.00000	.00000	.00000	.00000	.00000	.00010	.00000	.00022	176
14262	CCFA L	CARTRIDGE JACK ACTUATOR	.00000	.00006	.00000	.00000	.00000	.00000	.00000	.00005	.00000	.00011	
14262	CCFA R	CARTRIDGE JACK ACTUATOR	.00000	.00006	.00000	.00000	.00000	.00000	.00000	.00005	.00000	.00011	
14269	CCFD L	ELECTRICAL CONTROL	.00000	.00002	.00000	.00000	.00000	.00000	.00000	.00002	.00000	.00004	250
14311	CAAB	COVER ASSEMBLY	.00000	.00001	.00001	.00001	.00001	.00001	.00001	.00001	.00000	.00007	232
14312	CAAC	STEEL TE HONEYCOMB	.00000	.00001	.00001	.00001	.00001	.00001	.00001	.00001	.00000	.00007	231
14313	CAAD	ALUM TE HONEYCOMB	.00000	.00001	.00001	.00001	.00001	.00001	.00001	.00001	.00000	.00007	230
14321	CACM	FEEL SYSTEM BALANCE	.00000	.00003	.00002	.00002	.00002	.00002	.00002	.00003	.00000	.00016	185
14324	CACL	LONG BELLOWS BELL	.00000	.00006	.00005	.00005	.00005	.00005	.00005	.00007	.00000	.00038	145
14332	CACB	BELLOWS ASSY	.00000	.00018	.00013	.00012	.00012	.00012	.00012	.00020	.00000	.00099	97
14337	FACA		.00000	.00003	.00002	.00002	.00002	.00002	.00002	.00003	.00000	.00016	186
14410	CBAA	RUDDER ASSEMBLY	.00000	.00001	.00000	.00000	.00000	.00000	.00000	.00001	.00000	.00002	272
14423	CBBA	RUDDER POWER CONTROL CYL	.00000	.00033	.00009	.00006	.00006	.00006	.00006	.00027	.00000	.00093	99
1442E	CBFE	RUDDER AIR SPEED SWITCH	.00000	.00005	.00000	.00000	.00000	.00000	.00000	.00005	.00000	.00010	209
14428			.00000	.00011	.00001	.00001	.00001	.00001	.00001	.00009	.00000	.00025	173

WUC	ALPHA	WUC-TITLE	CRITICALITIES BY FLIGHT PHASE PH1	PH2	PH3	PH4	PH5	PH6	PH7	PH8	PH9	TOTAL CRIT	CRIT RANK
14428	ABAGB R	RUDDER PEDAL	.00000	.00003	.00000	.00000	.00000	.00000	.00000	.00002	.00000	.00005	
14428	ABAGC L	RUDDER PEDAL	.00000	.00003	.00000	.00000	.00000	.00000	.00000	.00002	.00000	.00005	
14428	CBGA	RUDDER PEDALS	.00000	.00005	.00001	.00001	.00001	.00001	.00001	.00005	.00000	.00015	
14432	CBGB	RUDDER FEEL CYLINDER	.00000	.00004	.00000	.00000	.00000	.00000	.00000	.00003	.00000	.00007	233
14435	CBGB	TRIM SWITCH	.00000	.00005	.00001	.00001	.00001	.00001	.00001	.00005	.00000	.00015	192
14500	CDB	FLAP CONTROL SYSTEM	.00045	.00059	.00045	.00045	.00045	.00045	.00050	.00068	.00045	.00447	46
14510			.00012	.00016	.00012	.00012	.00012	.00012	.00014	.00018	.00012	.00120	90
14510	CDBAC L	LE INBOARD LEFT FLAP	.00006	.00008	.00006	.00006	.00006	.00006	.00007	.00009	.00006	.00060	
14510	CDBAC R	LE INBOARD RIGHT FLAP	.00006	.00008	.00006	.00006	.00006	.00006	.00007	.00009	.00006	.00060	
14520			.00006	.00008	.00006	.00006	.00006	.00006	.00006	.00010	.00006	.00060	123
14520	CDBAB L	LE CENTER LEFT FLAP	.00003	.00004	.00003	.00003	.00003	.00003	.00003	.00005	.00003	.00030	
14520	CDBAB R	LE CENTER RIGHT FLAP	.00003	.00004	.00003	.00003	.00003	.00003	.00003	.00005	.00003	.00030	
14500			.00000	.00001	.00000	.00000	.00000	.00000	.00000	.00001	.00000	.00002	271
14540	CDBAD R	TE RIGHT FLAP	.00066	.00086	.00066	.00066	.00066	.00066	.00072	.00100	.00066	.00654	33
14541			.00000	.00001	.00000	.00000	.00000	.00000	.00000	.00002	.00000	.00003	256
14542			.00000	.00000	.00000	.00000	.00000	.00000	.00000	.00001	.00000	.00001	276
14543			.00000	.00001	.00000	.00000	.00000	.00000	.00000	.00002	.00000	.00003	254
14547			.00000	.00001	.00000	.00000	.00000	.00000	.00000	.00002	.00000	.00003	253
1455J	CDBGA	FLAP CONTROL SWITCH	.00000	.00070	.00024	.00024	.00024	.00024	.00042	.00082	.00000	.00290	56
14551			.00000	.00004	.00000	.00000	.00000	.00000	.00001	.00006	.00000	.00011	208
14552			.00001	.00007	.00007	.00007	.00007	.00007	.00007	.00017	.00001	.00061	121
14552	CDBCAA	HYD SOL SELECTOR VALVE	.00001	.00005	.00005	.00005	.00005	.00005	.00005	.00011	.00001	.00043	
14552	CDBCCD	HYD SOLENOID SELECTOR VALVE	.00000	.00002	.00002	.00002	.00002	.00002	.00002	.00006	.00000	.00018	
14553			.00000	.00080	.00020	.00020	.00020	.00020	.00032	.00096	.00000	.00288	58
14553	CDBCBA	HYD FLOW DIVIDER	.00000	.00040	.00010	.00010	.00010	.00010	.00016	.00048	.00000	.00144	
14553	CDBCCA	HYD FLOW DIVIDER	.00000	.00040	.00010	.00010	.00010	.00010	.00016	.00048	.00000	.00144	
1455E	CDBDL	FLAP AIRSPEED SWITCH	.00000	.00049	.00012	.00012	.00012	.00012	.00027	.00059	.00000	.00183	69
14555			.00106	.00246	.00106	.00106	.00106	.00106	.00212	.00268	.00106	.01362	18
14555	CDB8DAL	LEFT TE ACTUATING CYLINDER	.00053	.00123	.00053	.00053	.00053	.00053	.00106	.00134	.00053	.00681	
14555	CDB8DAR	RIGHT TE ACTUATING CYLINDER	.00053	.00123	.00053	.00053	.00053	.00053	.00106	.00134	.00053	.00681	
1455F			.00000	.00600	.00000	.00000	.00000	.00000	.00000	.01600	.00000	.02200	7
1455F	CDBDA	RT OUTBOARD LE UP LIMIT SW	.00000	.00060	.00000	.00000	.00000	.00000	.00000	.00160	.00000	.00220	
1455F	CDBDB	LEFT OUTBRD LE UP LIMIT SW	.00000	.00060	.00000	.00000	.00000	.00000	.00000	.00160	.00000	.00220	
1455F	CDBDC	RT INBOARD LE UP LIMIT SW	.00000	.00120	.00000	.00000	.00000	.00000	.00000	.00320	.00000	.00440	
1455F	CDBDE	RT CENTER LE UP LIMIT SW	.00000	.00060	.00000	.00000	.00000	.00000	.00000	.00160	.00000	.00220	
1455F	CDBDF	LEFT CENTER LE UP LIMIT SW	.00000	.00060	.00000	.00000	.00000	.00000	.00000	.00160	.00000	.00220	
1455F	CDBDG	RT TE UP LIMIT SWITCH	.00000	.00060	.00000	.00000	.00000	.00000	.00000	.00160	.00000	.00220	
1455F	CDBDH	LEFT TE UP LIMIT SWITCH	.00000	.00060	.00000	.00000	.00000	.00000	.00000	.00160	.00000	.00220	
1455F	CDBDJ	RT TE HALF UP LIMIT SWITCH	.00000	.00060	.00000	.00000	.00000	.00000	.00000	.00160	.00000	.00220	
1455F	CDBDK	LEFT TE HALF UP LIMIT SW	.00000	.00060	.00000	.00000	.00000	.00000	.00000	.00160	.00000	.00220	
14556			.00002	.00004	.00002	.00002	.00002	.00002	.00004	.00006	.00002	.00026	171
14556	CDB8CAL	ACTUATING CYLINDER	.00001	.00002	.00001	.00001	.00001	.00001	.00002	.00003	.00001	.00013	
14556	CDB8CAR	RIGHT INBOARD ACTUATING CYL	.00001	.00002	.00001	.00001	.00001	.00001	.00002	.00003	.00001	.00013	
14557			.00004	.00004	.00004	.00004	.00004	.00004	.00004	.00006	.00004	.00038	146
14557	CDB8BAL	ACTUATING CYLINDER	.00002	.00002	.00002	.00002	.00002	.00002	.00002	.00003	.00002	.00019	
14557	CDB8BAR	RIGHT CENTER ACTUATING CYL	.00002	.00002	.00002	.00002	.00002	.00002	.00002	.00003	.00002	.00019	
1455H	CDBCAC	DUMP VALVE OVERBOARD DRAIN	.00001	.00007	.00003	.00003	.00003	.00003	.00003	.00007	.00001	.00031	164
14590			.00000	.00003	.00000	.00000	.00000	.00000	.00001	.00005	.00000	.00009	216
14600			.00000	.00001	.00000	.00000	.00000	.00000	.00000	.00002	.00000	.00003	257

WUC	ALPHA		WUC-TITLE	CRITICALITIES BY FLIGHT PHASE PH1	PH2	PH3	PH4	PH5	PH6	PH7	PH8	PH9	TOTAL CRIT	CRIT RANK
14610				.00000	.00000	.00000	.00000	.00000	.00000	.00002	.00002	.00000	.00004	251
14610	CEAA	L	SPEED BRAKE ASSEMBLY	.00000	.00000	.00000	.00000	.00000	.00000	.00001	.00001	.00000	.00002	
14610	CEAA	R	SPEED BRAKE ASSEMBLY	.00000	.00000	.00000	.00000	.00000	.00000	.00001	.00001	.00000	.00002	
14611				.00000	.00000	.00000	.00000	.00000	.00000	.00001	.00001	.00000	.00002	273
14611	CEAB	L	HONEYCOMB SKIN	.00000	.00000	.00000	.00000	.00000	.00000	.00001	.00001	.00000	.00000	
14611	CEAB	R	HONEYCOMB SKIN	.00000	.00000	.00000	.00000	.00000	.00000	.00000	.00000	.00000	.00000	
1462A	CEFA		MANUAL RETRACT SWITCH	.00000	.00000	.00000	.00000	.00008	.00008	.00016	.00027	.00000	.00059	124
14621	CECA		SPEED BRAKE SELECTOR VALVE	.00000	.00000	.00000	.00000	.00002	.00002	.00004	.00004	.00000	.00012	204
14623				.00000	.00000	.00000	.00000	.00002	.00002	.00004	.00004	.00000	.00012	203
14623	CEAC	L	SPEED BRAKE CYLINDER	.00000	.00000	.00000	.00000	.00001	.00001	.00002	.00002	.00000	.00006	
14623	CEAC	R	SPEED BRAKE CYLINDER	.00000	.00000	.00000	.00000	.00001	.00001	.00002	.00002	.00000	.00006	
14627	CEDA		SPEED BRAKE CONTROL SWITCH	.00000	.00000	.00000	.00000	.00010	.00010	.00024	.00040	.00000	.00084	112
14811				.00006	.00008	.00006	.00006	.00006	.00006	.00006	.00008	.00006	.00058	125
14811	ABBAA	R	WINGFOLD PIN PULL CYLINDER	.00003	.00004	.00003	.00003	.00003	.00003	.00003	.00004	.00003	.00029	
14811	ABBAB	L	WINGFOLD PIN PULL CYLINDER	.00003	.00004	.00003	.00003	.00003	.00003	.00003	.00004	.00003	.00029	
14818	ABBEF		MANUAL LOCKPIN HANDLE	.00000	.00004	.00001	.00001	.00000	.00001	.00001	.00004	.00000	.00012	202
14812				.00002	.00002	.00002	.00002	.00002	.00002	.00002	.00002	.00002	.00018	184
14812	ABBHA	R	WINGFOLD ACTUATOR CYLINDER	.00001	.00001	.00001	.00001	.00001	.00001	.00001	.00001	.00001	.00009	
14812	ABBBB	L	WINGFOLD ACTUATOR CYLINDER	.00001	.00001	.00001	.00001	.00001	.00001	.00001	.00001	.00001	.00009	
14814	ABBCB	L	PIN PULL SELECTOR VALVE	.00006	.00009	.00006	.00006	.00006	.00006	.00006	.00009	.00006	.00060	122
14815				.00004	.00004	.00004	.00004	.00004	.00004	.00004	.00004	.00004	.00036	149
14815	ABBCC	R	WINGFOLD SELECTOR VALVE	.00002	.00002	.00002	.00002	.00002	.00002	.00002	.00002	.00002	.00018	
14815	ABBCD	L	WINGFOLD SELECTOR VALVE	.00002	.00002	.00002	.00002	.00002	.00002	.00002	.00002	.00002	.00018	
14818				.00016	.00020	.00018	.00018	.00016	.00018	.00018	.00020	.00016	.00160	77
14818	ABBAE	R	W/F PIN ACTUATOR BAR	.00008	.00010	.00009	.00009	.00008	.00009	.00009	.00010	.00008	.00080	
14818	ABBAF	L	W/F PIN ACTUATOR BAR	.00008	.00010	.00009	.00009	.00008	.00009	.00009	.00010	.00008	.00080	
14823				.00018	.00024	.00020	.00020	.00018	.00020	.00020	.00024	.00018	.00182	70
14823	ABBDA	R	WING SPREAD LIMIT SWITCH	.00009	.00012	.00010	.00010	.00009	.00010	.00010	.00012	.00009	.00091	
14823	ABBDB	L	WING SPREAD LIMIT-SWITCH	.00009	.00012	.00010	.00010	.00009	.00010	.00010	.00012	.00009	.00091	
23AA1				.00002	.00006	.00010	.00010	.00010	.00010	.00005	.00002	.00002	.00057	126
23AA1	BAEBA	L		.00001	.00003	.00007	.00007	.00007	.00007	.00004	.00001	.00001	.00038	
23AA1	BAEBA	R	IGNITION EXCITER UNIT	.00001	.00003	.00003	.00003	.00003	.00003	.00001	.00001	.00001	.00019	
23AA4				.00008	.00036	.00031	.00031	.00031	.00031	.00024	.00014	.00008	.00216	65
23AA4	BARBA	L	AFTERBURNER IGNITION SWITCH	.00004	.00018	.00020	.00020	.00020	.00020	.00016	.00008	.00004	.00130	
23AA4	BARBA	R	AFTERBURNER IGNITION SWITCH	.00004	.00018	.00011	.00011	.00011	.00011	.00008	.00008	.00004	.00086	
23AA5				.00000	.00000	.00003	.00003	.00003	.00003	.00002	.00000	.00000	.00014	195
23AA5	BAEAB	L	HIGH TENSION LEAD	.00000	.00000	.00003	.00003	.00003	.00003	.00002	.00000	.00000	.00014	
23AA5	BAEAB	R	HIGH TENSION LEAD	.00000	.00000	.00000	.00000	.00000	.00000	.00000	.00000	.00000	.00000	
23A1140	BAJAB	L	GUIDE VANE	.00002	.00012	.00009	.00010	.00010	.00010	.00003	.00002	.00002	.00060	
23A1140	BAJAB	R	GUIDE VANE	.00002	.00012	.00009	.00010	.00010	.00010	.00003	.00002	.00002	.00060	
23A1140				.00004	.00024	.00018	.00020	.00020	.00020	.00006	.00004	.00004	.00120	89
23AB100	FAJC	L	ANTI-ICE VALVE	.00002	.00002	.00002	.00002	.00002	.00002	.00002	.00002	.00002	.00018	183
23A4340	BARAA	L	TORCH IGNITER	.00000	.00011	.00004	.00004	.00004	.00004	.00003	.00002	.00000	.00032	
23A4340	BARAA	R	TORCH IGNITER	.00000	.00011	.00004	.00004	.00004	.00004	.00003	.00002	.00000	.00032	
23A4340				.00000	.00022	.00008	.00008	.00008	.00008	.00006	.00004	.00000	.00064	120
23A4470	BABBB	L	SUPPORT RING	.00004	.00006	.00006	.00006	.00006	.00006	.00004	.00004	.00004	.00046	
23A4470	BABBB	R	SUPPORT RING	.00004	.00006	.00005	.00005	.00005	.00005	.00004	.00004	.00004	.00042	
23A4470				.00008	.00012	.00011	.00011	.00011	.00011	.00008	.00008	.00008	.00088	108
23A4471	BABBC	L		.00002	.00002	.00002	.00002	.00002	.00002	.00002	.00002	.00002	.00018	

WUC	ALPHA	WUC-TITLE	CRITICALITIES BY FLIGHT PHASE PH	PH2	PH3	PH4	PH5	PH6	PH7	PH8	PH9	TOTAL CRIT	CRIT RANK
23A4471	BABBC R	SHROUD FLAP	.00002	.00002	.00002	.00002	.00002	.00002	.00002	.00002	.00002	.00018	
23A4471			.00004	.00004	.00004	.00004	.00004	.00004	.00004	.00004	.00004	.00036	151
23A4480	BABBE L	NOZZLE FLAP	.00004	.00006	.00006	.00006	.00006	.00006	.00004	.00004	.00004	.00046	
23A4480	BABBE R	NOZZLE FLAP	.00004	.00006	.00005	.00005	.00005	.00005	.00004	.00004	.00004	.00042	
23A4480			.00008	.00012	.00011	.00011	.00011	.00011	.00008	.00008	.00008	.00088	107
23A4482	BABBG L	NOZZLE FLAP HINGE	.00002	.00002	.00002	.00002	.00002	.00002	.00002	.00002	.00002	.00018	
23A4482	BABBG R	NOZZLE FLAP HINGE	.00002	.00002	.00002	.00002	.00002	.00002	.00002	.00002	.00002	.00018	
23A4482			.00004	.00004	.00004	.00004	.00004	.00004	.00004	.00004	.00004	.00036	152
23A4490	BABBH L		.00002	.00002	.00002	.00002	.00002	.00002	.00002	.00002	.00002	.00018	
23A4490	BABBH R	CAM LINK ACTUATOR	.00002	.00002	.00002	.00002	.00002	.00002	.00002	.00002	.00002	.00018	
23A4490			.00004	.00004	.00004	.00004	.00004	.00004	.00004	.00004	.00004	.00036	150
23A6A			.00164	.00260	.00227	.00227	.00227	.00227	.00215	.00196	.00164	.01907	10
23A6A	BABBS L	NOZZLE AREA CONTROL VALVE	.00082	.00130	.00119	.00119	.00119	.00119	.00112	.00098	.00082	.00980	
23A6A	BABBS R	NOZZLE AREA CONTROL VALVE	.00082	.00130	.00108	.00108	.00108	.00108	.00103	.00098	.00082	.00927	
23A62			.00000	.00007	.00000	.00000	.00000	.00000	.00000	.00000	.00000	.00007	235
23A6210	BADBD L	INLET TEMPERATURE SENSOR	.00008	.00056	.00037	.00037	.00037	.00037	.00037	.00023	.00008	.00280	
23A6210	BADBD R	INLET TEMPERATURE SENSOR	.00008	.00056	.00024	.00024	.00024	.00024	.00025	.00023	.00008	.00216	
23A6210			.00016	.00112	.00061	.00061	.00061	.00061	.00062	.00046	.00016	.00496	42
23A63			.00016	.00112	.00072	.00072	.00072	.00072	.00065	.00046	.00016	.00543	37
23A63	BADBB L	TORQUE BOOSTER CONTROL	.00008	.00056	.00043	.00043	.00043	.00043	.00039	.00023	.00008	.00306	
23A63	BADBB R	TORQUE BOOSTER CONTROL	.00008	.00056	.00029	.00029	.00029	.00029	.00026	.00023	.00008	.00237	
23A65			.00008	.00026	.00016	.00016	.00016	.00016	.00014	.00010	.00008	.00130	85
23A65	BADCA L		.00004	.00013	.00008	.00008	.00008	.00008	.00007	.00005	.00004	.00065	
23A65	BADCA R	PRESSURIZE AND DUMP VALVE	.00004	.00013	.00008	.00008	.00008	.00008	.00007	.00005	.00004	.00065	
23A67			.00004	.00006	.00004	.00004	.00004	.00004	.00004	.00004	.00004	.00038	144
23A67	BADDC L		.00002	.00003	.00002	.00002	.00002	.00002	.00002	.00002	.00002	.00019	
23A67	BADDC R	FUEL TUBING	.00002	.00003	.00002	.00002	.00002	.00002	.00002	.00002	.00002	.00019	
23A7140	BAQCF L	ON/OFF VALVE	.00002	.00011	.00005	.00005	.00005	.00005	.00006	.00002	.00002	.00046	
23A7140	BAQCF R	ON/OFF VALVE	.00002	.00011	.00005	.00005	.00005	.00005	.00006	.00002	.00002	.00046	
23A7140			.00004	.00022	.00010	.00010	.00010	.00010	.00012	.00004	.00004	.00092	100
23A73			.00004	.00022	.00008	.00008	.00008	.00008	.00004	.00010	.00004	.00076	116
23A73	BAQAD L	PRESSURIZING VALVE	.00002	.00011	.00004	.00004	.00004	.00004	.00002	.00005	.00002	.00038	
23A73	BAQAD R	PRESSURIZING VALVE	.00002	.00011	.00004	.00004	.00004	.00004	.00002	.00005	.00002	.00038	
23A78			.00004	.00008	.00004	.00004	.00004	.00004	.00004	.00004	.00004	.00040	139
23A78	BAQBA L	A/B FUEL CONTROL	.00002	.00004	.00002	.00002	.00002	.00002	.00002	.00002	.00002	.00020	
23A78	BAQBA R	A/B FUEL CONTROL	.00002	.00004	.00002	.00002	.00002	.00002	.00002	.00002	.00002	.00020	
23A81			.00010	.00018	.00014	.00014	.00014	.00014	.00014	.00012	.00010	.00120	88
23A81	BCDA L	MAIN OIL PUMP	.00005	.00009	.00007	.00007	.00007	.00007	.00007	.00006	.00005	.00060	
23A81	BCDA R	MAIN OIL PUMP	.00005	.00009	.00007	.00007	.00007	.00007	.00007	.00006	.00005	.00060	
23A8700	BCAB R	OIL TUBING	.00056	.00382	.00196	.00208	.00216	.00216	.00182	.00258	.00056	.01770	11
23A88			.00032	.00058	.00046	.00046	.00046	.00046	.00044	.00042	.00032	.00392	47
23A88	BABDA L	NOZZLE PUMP	.00016	.00029	.00023	.00023	.00023	.00023	.00022	.00021	.00016	.00196	
23A88	BABDA R	NOZZLE PUMP	.00016	.00029	.00023	.00023	.00023	.00023	.00022	.00021	.00016	.00196	
23A91			.00008	.00012	.00012	.00012	.00012	.00012	.00010	.00008	.00008	.00094	98
23A91	BABCD L	BRANCHED CABLE	.00004	.00006	.00006	.00006	.00006	.00006	.00005	.00004	.00004	.00047	
23A91	BABCD R	BRANCHED CABLE	.00004	.00006	.00006	.00006	.00006	.00006	.00005	.00004	.00004	.00047	
23A92			.00018	.00034	.00026	.00026	.00026	.00026	.00024	.00024	.00018	.00222	63
23A92	BABCA L	CONTROL ALTERNATOR	.00009	.00017	.00013	.00013	.00013	.00013	.00012	.00012	.00009	.00111	
23A92	BABCA R	CONTROL ALTERNATOR	.00009	.00017	.00013	.00013	.00013	.00013	.00012	.00012	.00009	.00111	

WUC	ALPHA	WUC-TITLE	CRITICALITIES BY FLIGHT PHASE PH1	PH2	PH3	PH4	PH5	PH6	PH7	PH8	PH9	TOTAL CRIT	CRIT RANK
23A93			.00222	.00546	.00411	.00411	.00411	.00411	.00384	.00324	.00222	.03342	6
23A93	BABCB L	TEMPERATURE AMPLIFIER	.00111	.00273	.00228	.00228	.00228	.00228	.00213	.00162	.00111	.01702	
23A93	BABCB R	TEMPERATURE AMPLIFIER	.00111	.00273	.00183	.00183	.00183	.00183	.00171	.00162	.00111	.01560	
29A11			.00000	.00006	.00000	.00000	.00000	.00000	.00000	.00000	.00000	.00006	236
29A11	BFAA L	BELLMOUTH RING	.00000	.00003	.00000	.00000	.00000	.00000	.00000	.00000	.00000	.00003	
29A11	BFAA R	BELLMOUTH RING	.00000	.00003	.00000	.00000	.00000	.00000	.00000	.00000	.00000	.00003	
29A1G			.00000	.00020	.00000	.00000	.00000	.00000	.00000	.00000	.00000	.00020	180
29A1G	BFCA L	CONTROLLER	.00000	.00010	.00000	.00000	.00000	.00000	.00000	.00000	.00000	.00010	
29A1G	BFCA R	CONTROLLER	.00000	.00010	.00000	.00000	.00000	.00000	.00000	.00000	.00000	.00010	
29A1H			.00000	.00014	.00000	.00000	.00000	.00000	.00000	.00000	.00000	.00014	196
29A1H	BFCD L	PITOT TUBE	.00000	.00007	.00000	.00000	.00000	.00000	.00000	.00000	.00000	.00007	
29A1H	BFCD R	PITOT TUBE	.00000	.00007	.00000	.00000	.00000	.00000	.00000	.00000	.00000	.00007	
29A1H	FAAA		.00000	.00000	.00000	.00000	.00000	.00000	.00000	.00000	.00000	.00000	
29311			.00062	.00396	.00219	.00219	.00217	.00219	.00198	.00152	.00062	.01744	12
29311	BGAAA	THROTTLE LEVER	.00020	.00084	.00049	.00049	.00049	.00049	.00042	.00032	.00020	.00394	
29311	BGAAA L	THROTTLE LEVER	.00021	.00156	.00101	.00101	.00100	.00101	.00093	.00069	.00021	.00754	
29311	BGAAA R	THROTTLE LEVER	.00021	.00156	.00069	.00069	.00068	.00069	.00063	.00063	.00021	.00596	
29312	BGAAB	FRICTION LOCK	.00014	.00060	.00035	.00035	.00035	.00035	.00035	.00026	.00014	.00289	57
2931D	BGAAC	TELEFLEX UNIT	.00026	.00110	.00069	.00069	.00069	.00069	.00056	.00044	.00026	.00538	38
2931E	BGAAD	TELESCOPING UNIT	.00048	.00202	.00127	.00127	.00127	.00127	.00107	.00078	.00048	.00991	28
29C11			.00000	.00000	.00000	.00000	.00000	.00000	.00000	.00004	.00000	.00004	249
29C11	BGBDB	ANGLE OF ATTACK TRANSMITTER	.00000	.00000	.00000	.00000	.00000	.00000	.00000	.00002	.00000	.00002	
29C11	BGBDC	STAB POSITION TRANSDUCER	.00000	.00000	.00000	.00000	.00000	.00000	.00000	.00002	.00000	.00002	
29C14	BGBAA	CONTROL AMPLIFIER	.00000	.00000	.00000	.00000	.00000	.00000	.00000	.00002	.00000	.00002	270
29C15	BGABA	INTEGRATED TORQUE BOOSTER	.00022	.00090	.00070	.00070	.00070	.00070	.00065	.00042	.00022	.00521	39
29C17	BGBCA	WARNING LIGHT	.00000	.00000	.00000	.00000	.00000	.00000	.00000	.00001	.00000	.00001	278
4111J			.00000	.00001	.00003	.00009	.00009	.00009	.00003	.00001	.00000	.00035	156
4111J	EAABA	TEMPERATURE CONTROL PANEL	.00000	.00001	.00001	.00003	.00003	.00003	.00001	.00001	.00000	.00013	
4111J	EAADA	TEMPERATURE CONTROL PANEL	.00000	.00000	.00002	.00006	.00006	.00006	.00002	.00000	.00000	.00022	
4111B	EAABG	TEMP CONTROL RHEOSTAT	.00000	.00001	.00001	.00003	.00003	.00003	.00001	.00001	.00000	.00013	199
41112			.00000	.00002	.00002	.00006	.00006	.00006	.00002	.00002	.00000	.00026	172
41112	EABB	FOOT HEAT-DEFOG CONTROL LVR	.00000	.00002	.00002	.00004	.00004	.00004	.00002	.00002	.00000	.00020	
41112	EACB	FOOT HEAT-DEFOG CONTROL LVR	.00000	.00000	.00000	.00002	.00002	.00002	.00000	.00000	.00000	.00006	
4111L			.00000	.00000	.00002	.00002	.00002	.00002	.00002	.00000	.00000	.00010	210
4111L	EAEC	AFT PRESS SUT ARFL SHTOF VL	.00000	.00000	.00001	.00001	.00001	.00001	.00001	.00000	.00000	.00005	
4111L	EAFC	FWD PRES SUT ARFL SHTOF VLV	.00000	.00000	.00001	.00001	.00001	.00001	.00001	.00000	.00000	.00005	
41113	EAABD	MAGNETIC AMPLIFIER	.00000	.00007	.00007	.00021	.00021	.00021	.00007	.00007	.00000	.00091	102
41115	EAABE	CABIN TEMPERATURE SENSOR	.00000	.00008	.00008	.00024	.00024	.00024	.00008	.00008	.00000	.00104	96
4111F	EAAAL	CABIN AIR INLET VALVE	.00000	.00000	.00000	.00001	.00001	.00001	.00000	.00000	.00000	.00003	258
41117			.00000	.00000	.00000	.00001	.00001	.00001	.00000	.00000	.00000	.00003	257
41117	EAAJC	AIR DISTRIBUTION DUCT	.00000	.00000	.00000	.00001	.00001	.00001	.00000	.00000	.00000	.00003	
41117	EAAKB	DUCTING	.00000	.00000	.00000	.00000	.00000	.00000	.00000	.00000	.00000	.00000	
41118	EADA	WINDSHIELD CNT PNL DEFG NOZ	.00000	.00001	.00001	.00001	.00001	.00001	.00001	.00001	.00000	.00007	234
4111R			.00000	.00001	.00003	.00010	.00010	.00010	.00004	.00001	.00000	.00039	142
4111R	EAABF	CABIN MANUAL TEMP SENSOR	.00000	.00001	.00001	.00003	.00003	.00003	.00001	.00001	.00000	.00013	
4111R	EAADB	CABIN MANUAL TEMP LIMITER	.00000	.00000	.00002	.00007	.00007	.00007	.00003	.00000	.00000	.00026	
41120	EAAGC	CABIN HEAT EXCHANGER	.00000	.00002	.00002	.00002	.00002	.00002	.00002	.00002	.00000	.00014	194
41128	EAAFD	COOLING TURBINE	.00000	.00000	.00000	.00030	.00030	.00030	.00000	.00000	.00000	.00090	104
41123	EAAFA	TURBINE OVERSPEED SWITCH	.00000	.00000	.00000	.00005	.00005	.00005	.00000	.00000	.00000	.00015	193

CRITICALITY ORDERED BY WORK UNIT CODE (PAGE 7 OF 12)

WUC	ALPHA	WUC-TITLE	CRITICALITIES BY FLIGHT PHASE PH1	PH2	PH3	PH4	PH5	PH6	PH7	PH8	PH9	TOTAL CRIT	CRIT RANK
41120	EAAGC	CABIN HEAT EXCHANGER	.00000	.00001	.00002	.00011	.00011	.00011	.00002	.00001	.00000	.00039	141
41124	EAACE	PRESS SUIT TEMP MIXING VALV	.00000	.00000	.00000	.00002	.00002	.00002	.00000	.00000	.00000	.00006	237
4112E	EAAGG	RUPTURE DISC	.00000	.00004	.00008	.00048	.00048	.00048	.00006	.00004	.00000	.00168	74
41125			.00000	.00003	.00006	.00037	.00037	.00037	.00010	.00000	.00000	.00127	86
41125	EAADC	CABIN DUAL TEMP MIXING VALV	.00000	.00000	.00006	.00022	.00022	.00022	.00010	.00000	.00000	.00082	
41125	EAAFB	CABIN MIXING VALVE	.00000	.00000	.00000	.00015	.00015	.00015	.00000	.00000	.00000	.00045	
4112F	EAAJA	BLD AR PRES REG + SHTOF VLV	.00000	.00001	.00006	.00024	.00024	.00024	.00008	.00001	.00000	.00088	109
41127	EAAGF	GROUND COOLING SHUTOFF VLV	.00000	.00000	.00000	.00001	.00001	.00001	.00000	.00000	.00000	.00003	259
41128	EAAGA	CABIN AIR OUTLET DUCT	.00000	.00001	.00002	.00011	.00011	.00011	.00002	.00001	.00000	.00039	143
41134			.00000	.00004	.00000	.00000	.00000	.00000	.00000	.00000	.00000	.00004	247
41134	EBADC	BLEED AIR INLET DUCT	.00000	.00002	.00000	.00000	.00000	.00000	.00000	.00000	.00000	.00002	
41134	EBADD	BLEED AIR OUTLET DUCT	.00000	.00002	.00000	.00000	.00000	.00000	.00000	.00000	.00000	.00002	
41134	EBPCJ	DUCTING	.00000	.00000	.00000	.00000	.00000	.00000	.00000	.00000	.00000	.00000	
41211	EAAAA	PNEUMATIC DUMP VALVE	.00000	.00000	.00001	.00002	.00002	.00002	.00001	.00000	.00000	.00008	218
41215	EAAAG	CABIN PRESS SAFETY VALVE	.00000	.00000	.00000	.00001	.00001	.00001	.00001	.00000	.00000	.00004	248
41216	EAAAD	CABIN PRESSURE REGULATOR	.00000	.00000	.00008	.00021	.00021	.00021	.00013	.00000	.00000	.00084	110
41238	EHD	CHECK VALVE	.00000	.00000	.00001	.00002	.00002	.00002	.00002	.00001	.00000	.00010	211
41411	EFBB	AFT ANTI-G VALVE	.00000	.00000	.00006	.00006	.00006	.00006	.00006	.00000	.00000	.00030	165
41521			.00000	.00004	.00000	.00000	.00000	.00000	.00004	.00004	.00000	.00012	206
41521	CDAACAL	W/F BLC BELLOWS	.00000	.00002	.00000	.00000	.00000	.00000	.00002	.00002	.00000	.00006	
41521	CDAACAR	W/F BLC BELLOWS	.00000	.00002	.00000	.00000	.00000	.00000	.00002	.00002	.00000	.00006	
41531			.00000	.00002	.00000	.00000	.00000	.00000	.00002	.00002	.00000	.00006	238
41531	CDAABAL	BELLOWS ASSY	.00000	.00001	.00000	.00000	.00000	.00000	.00001	.00001	.00000	.00003	
41531	CDAABAR	BELLOWS ASSY	.00000	.00001	.00000	.00000	.00000	.00000	.00001	.00001	.00000	.00003	
41533			.00000	.00018	.00000	.00000	.00000	.00000	.00016	.00018	.00000	.00052	131
41533	CDAABCL	LE CUTOFF VALVE	.00000	.00009	.00000	.00000	.00000	.00000	.00008	.00009	.00000	.00026	
41533	CDAABCR	LE CUTOFF VALVE	.00000	.00009	.00000	.00000	.00000	.00000	.00008	.00009	.00000	.00026	
41537			.00000	.00008	.00000	.00000	.00000	.00000	.00006	.00008	.00000	.00022	179
41537	CDAABGL	SHUTOFF VALVE SWITCH	.00000	.00004	.00000	.00000	.00000	.00000	.00003	.00004	.00000	.00011	
41537	CDAABGR	SHUTOFF VALVE SWITCH	.00000	.00004	.00000	.00000	.00000	.00000	.00003	.00004	.00000	.00011	
41538			.00000	.00008	.00000	.00000	.00000	.00000	.00006	.00008	.00000	.00022	178
41538	CDAABHL	SHUTOFF VALVE LINK	.00000	.00004	.00000	.00000	.00000	.00000	.00003	.00004	.00000	.00011	
41538	CDAABHR	SHUTOFF VALVE LINK	.00000	.00004	.00000	.00000	.00000	.00000	.00003	.00004	.00000	.00011	
41541			.00000	.00008	.00000	.00000	.00000	.00000	.00006	.00008	.00000	.00022	177
41541	CDAAAAL	DUCT	.00000	.00004	.00000	.00000	.00000	.00000	.00003	.00004	.00000	.00011	
41541	CDAAAAR	DUCT	.00000	.00004	.00000	.00000	.00000	.00000	.00003	.00004	.00000	.00011	
41548	CDAAAJR	TE POSITION SWITCH	.00000	.00018	.00000	.00000	.00000	.00000	.00016	.00018	.00000	.00052	130
41542			.00000	.00014	.00000	.00000	.00000	.00000	.00014	.00014	.00000	.00042	138
41542	CDAAABL		.00000	.00007	.00000	.00000	.00000	.00000	.00007	.00007	.00000	.00021	
41542	CDAAABR	SHUTOFF VALVE	.00000	.00007	.00000	.00000	.00000	.00000	.00007	.00007	.00000	.00021	
41547			.00000	.00012	.00000	.00000	.00000	.00000	.00012	.00012	.00000	.00036	153
41547	CDAAAEL	SHUTOFF VALVE SWITCH	.00000	.00006	.00000	.00000	.00000	.00000	.00006	.00006	.00000	.00018	
41547	CDAAAER	SHUTOFF VALVE SWITCH	.00000	.00006	.00000	.00000	.00000	.00000	.00006	.00006	.00000	.00018	
41548			.00000	.00004	.00000	.00000	.00000	.00000	.00004	.00004	.00000	.00012	205
41548	CDAAAGL		.00000	.00002	.00000	.00000	.00000	.00000	.00002	.00002	.00000	.00006	
41548	CDAAAGR	SEAL	.00000	.00002	.00000	.00000	.00000	.00000	.00002	.00002	.00000	.00006	
41551	CDAEA	MALFUNCTION LIGHT	.00005	.00005	.00005	.00005	.00005	.00005	.00005	.00005	.00005	.00045	136
41552	CDAFA	LIMIT SWITCH	.00042	.00042	.00042	.00042	.00042	.00042	.00042	.00042	.00042	.00378	49
42121			.00000	.00044	.00022	.00176	.00176	.00176	.00022	.00044	.00000	.00660	32

WUC	ALPHA	WUC-TITLE	CRITICALITIES BY FLIGHT PHASE PH1	PH2	PH3	PH4	PH5	PH6	PH7	PH8	PH9	TOTAL CRIT	CRIT RANK
42121	KAUA L	LH GENERATOR	.00000	.00022	.00011	.00088	.00088	.00088	.00011	.00022	.00000	.00330	
42121	KAUA R	RH GENERATOR	.00000	.00022	.00011	.00088	.00088	.00088	.00011	.00022	.00000	.00330	
42122	KASA	PILOT GENERATOR CONT PANEL	.00002	.00172	.00094	.00192	.00198	.00192	.00096	.00106	.00002	.01034	25
42120			.00020	.00020	.00016	.00020	.00020	.00020	.00016	.00020	.00020	.00172	73
42120	KAJA	28VAC AUTO TRANSFORMER	.00010	.00010	.00008	.00010	.00010	.00010	.00008	.00010	.00010	.00086	
42120	KAKA	28VAC AUTO TRANSFORMER	.00010	.00010	.00008	.00010	.00010	.00010	.00008	.00010	.00010	.00086	
42125	KATB R	R STATIC EXCITER REGULATOR	.00002	.00008	.00002	.00005	.00005	.00005	.00004	.00000	.00000	.00034	158
42127	KANB	GENERATOR CONTROL PANEL	.03677	.16381	.10608	.14490	.14136	.14581	.10930	.11885	.03677	1.00368	1
42128	KAMA	AC POWER CONTROL BOX	.00238	.01019	.00642	.00872	.00846	.00878	.00660	.00756	.00238	.06149	4
42131			.00038	.00179	.00072	.00088	.00088	.00088	.00094	.00127	.00042	.00816	30
42131	KBFA	TRANSFORMER RECTIVIER	.00019	.00102	.00038	.00050	.00050	.00050	.00054	.00073	.00021	.00457	
42131	KBGA	TRANSFORMER RECTIFIER	.00019	.00077	.00034	.00038	.00038	.00038	.00040	.00054	.00021	.00359	
42141	KHFA	EMERGENCY GENERATOR	.00000	.00002	.00000	.00000	.00000	.00000	.00000	.00002	.00000	.00004	246
42143	KHBA	AIRSPEED SWITCH	.00050	.00162	.00115	.00175	.00168	.00177	.00125	.00134	.00050	.01156	22
42152			.00000	.00001	.00004	.00012	.00012	.00012	.00005	.00000	.00000	.00047	135
42152	EAADE	NO 2 CKT BREAKER PANEL	.00000	.00001	.00004	.00012	.00012	.00012	.00005	.00001	.00000	.00047	
42152	EEEA	NO 2 CKBR PANEL	.00000	.00000	.00000	.00000	.00000	.00000	.00000	.00000	.00000	.00000	
42152	GACAEF	NO 2 CIRCUIT BREAKER PANEL	.00000	.00000	.00000	.00000	.00000	.00000	.00000	.00000	.00000	.00000	
42210			.00000	.00020	.00010	.00082	.00082	.00082	.00010	.00020	.00000	.00306	54
42210	KAUB L	LH CONSTANT SPEED DRIVE	.00000	.00010	.00005	.00041	.00041	.00041	.00005	.00010	.00000	.00153	
42210	KAUB R	RH CONSTANT SPEED DRIVE	.00000	.00010	.00005	.00041	.00041	.00041	.00005	.00010	.00000	.00153	
44112			.00075	.00082	.00095	.00105	.00103	.00103	.00102	.00096	.00089	.00850	29
44112	EEAAB	COCKPIT CONTROL PANEL	.00000	.00000	.00000	.00000	.00000	.00000	.00000	.00000	.00000	.00000	
44112	EECA	COCKPIT LIGHTS CONTROL PNL	.00000	.00000	.00000	.00000	.00000	.00000	.00000	.00000	.00000	.00000	
44112	EEDB	COCKPIT LIGHTS CONTROL PNEL	.00000	.00000	.00000	.00000	.00000	.00000	.00000	.00000	.00000	.00000	
44112	KARA	LIGHT CONTROL PANEL	.00075	.00082	.00095	.00105	.00103	.00103	.00102	.00096	.00089	.00850	
44228			.00000	.00000	.00000	.00001	.00001	.00002	.00002	.00001	.00000	.00007	229
44228	BBPL	NIGHT REFUELING LIGHT	.00000	.00000	.00000	.00001	.00001	.00002	.00002	.00001	.00000	.00007	
44228	FBBA	IFR PROBE LIGHT	.00000	.00000	.00000	.00000	.00000	.00000	.00000	.00000	.00000	.00000	
45115	KCDC	HYD/FUEL RADIATOR	.00000	.00001	.00001	.00001	.00001	.00001	.00001	.00001	.00000	.00007	227
45112	KCBA	HYDRAULIC PUMP	.00000	.00026	.00022	.00022	.00022	.00022	.00022	.00026	.00000	.00162	76
45113	KCDA	RESERVOIR	.00000	.00008	.00007	.00007	.00007	.00007	.00007	.00008	.00000	.00051	132
45115	KCBB	ACCUMULATOR	.00000	.00009	.00007	.00007	.00007	.00007	.00007	.00009	.00000	.00053	129
45117	KFAA	PC I PRESSURE SWITCH	.00000	.00001	.00001	.00001	.00001	.00001	.00001	.00001	.00000	.00007	228
4512A	KDDA	RESERVOIR	.00000	.00011	.00010	.00010	.00010	.00010	.00010	.00012	.00000	.00073	118
45122	KDBA	HYDRAULIC PUMP	.00000	.00021	.00018	.00018	.00018	.00018	.00018	.00022	.00000	.00133	83
45123	KDBB	ACCUMULATOR	.00000	.00015	.00012	.00012	.00012	.00012	.00012	.00016	.00000	.00091	103
4513A	KEDA	RESERVOIR	.00027	.00225	.00080	.00082	.00088	.00090	.00103	.00281	.00027	.01003	27
4513C			.00764	.01554	.01000	.01004	.01020	.01044	.01132	.01728	.00792	.10042	2
4513C	KEBA	LH HYDRAULIC PUMP	.00382	.00777	.00500	.00504	.00510	.00522	.00566	.00864	.00396	.05021	
4513C	KEBB	RH HYDRAULIC PUMP	.00382	.00777	.00500	.00504	.00510	.00522	.00566	.00864	.00396	.05021	
4513D	KEBC	SYSTEM ACCUMULATOR	.00171	.00329	.00207	.00208	.00210	.00213	.00226	.00360	.00177	.02101	9
45134	KEAD	MANIFOLD	.00065	.00083	.00063	.00063	.00063	.00063	.00063	.00086	.00065	.00614	34
45135	KEBD	ACCUMULATOR GAGE	.00042	.00087	.00048	.00048	.00050	.00050	.00050	.00081	.00044	.00500	41
45211	KGBA	MOISTURE SEPARATOR	.00000	.00002	.00004	.00008	.00008	.00008	.00004	.00006	.00000	.00110	91
4521B	KGBB	CHEMICAL DRIER	.00000	.00000	.00000	.00000	.00000	.00000	.00000	.00000	.00000	.00008	219
4521C	KGCA	HYD DRIVE COMPRESSOR	.00000	.00006	.00006	.00018	.00018	.00018	.00006	.00012	.00000	.00084	111
4521G	KGAA	GROUND CHARGING AIR VALVE	.00012	.00012	.00012	.00012	.00012	.00012	.00012	.00012	.00012	.00108	92
45321	KHFC	PNEUMATIC SEQUENCE VALVE	.00000	.00002	.00000	.00004	.00004	.00004	.00000	.00002	.00000	.00016	188

WUC	ALPHA		WUC-TITLE	CRITICALITIES BY FLIGHT PHASE PH1	PH2	PH3	PH4	PH5	PH6	PH7	PH8	PH9	TOTAL CRIT	CRIT RANK
4532C	KHFJ		SWIVEL ASSEMBLY	.00000	.00002	.00000	.00000	.00000	.00000	.00000	.00002	.00000	.00004	243
4532700	KHFB		RAM AIR TURBINE	.00000	.00002	.00000	.00004	.00004	.00004	.00000	.00002	.00000	.00016	187
46112				.00006	.00036	.00015	.00015	.00015	.00015	.00015	.00013	.00006	.00136	81
46112	BBMA	L	L WING TANK PRESS REGULATOR	.00006	.00036	.00015	.00015	.00015	.00015	.00015	.00013	.00006	.00136	
46112	BBMA	R	R WING TANK PRESS REGULATOR	.00000	.00000	.00000	.00000	.00000	.00000	.00000	.00000	.00000	.00000	
46118				.00004	.00028	.00013	.00013	.00013	.00013	.00012	.00007	.00004	.00107	95
46118	BBMD	L		.00004	.00028	.00013	.00013	.00013	.00013	.00012	.00007	.00004	.00107	
46118	BBMC	R	R WING PRESS/VENT VALVE	.00000	.00000	.00000	.00000	.00000	.00000	.00000	.00000	.00000	.00000	
46121	BBHH		REFUELING SHUTOFF VALVE	.00000	.00000	.00001	.00001	.00000	.00000	.00000	.00000	.00000	.00002	265
46122	BBBE		DEFUELING SHUTOFF VALVE	.00000	.00001	.00000	.00000	.00000	.00000	.00000	.00000	.00000	.00001	280
4613100	BBBA		LH BOOST PUMP ASSEMBLY	.00000	.00001	.00000	.00000	.00000	.00000	.00000	.00000	.00000	.00001	
4613100	BBBR		RH BOOST PUMP ASSEMBLY	.00000	.00001	.00000	.00000	.00000	.00000	.00000	.00000	.00000	.00001	
4613100				.00000	.00002	.00000	.00000	.00000	.00000	.00000	.00000	.00000	.00002	266
46135	BBBG		MANIFOLD DRAIN VALVE	.00000	.00002	.00000	.00000	.00000	.00002	.00004	.00002	.00000	.00010	213
4614D	BBCM		TANK NO 4 ELECT FUEL PUMP	.00000	.00002	.00000	.00000	.00000	.00000	.00000	.00000	.00000	.00002	263
4614E	BBCP		TANK NO 6 ELECT FUEL PUMP	.00000	.00006	.00000	.00000	.00000	.00000	.00000	.00000	.00000	.00006	239
46161	BBCA		TANK NO 1	.00000	.00003	.00000	.00000	.00000	.00000	.00000	.00000	.00000	.00003	262
46162	BBCB		TANK NO 2	.00000	.00001	.00000	.00000	.00000	.00000	.00000	.00000	.00000	.00001	282
46164	BBCD		TANK NO 4	.00000	.00001	.00000	.00000	.00000	.00000	.00000	.00000	.00000	.00001	281
46167	BBCG		TANK NO 7	.00000	.00008	.00001	.00001	.00001	.00004	.00004	.00001	.00000	.00020	181
46171	BBLC	L	L WING TANK	.00044	.00289	.00125	.00125	.00125	.00125	.00120	.00087	.00044	.01084	24
46212	BBJB		CL TANK PRESS/VENT VALVE	.00000	.00000	.00001	.00001	.00000	.00000	.00000	.00000	.00000	.00002	264
4621D				.00004	.00029	.00013	.00013	.00013	.00013	.00012	.00007	.00004	.00108	94
4621D	BBJG	L	L DROP TANK PRESS/VENT V	.00004	.00029	.00013	.00013	.00013	.00013	.00012	.00007	.00004	.00108	
4621D	BBJG	R	R DROP TANK PRESS/VENT V	.00000	.00000	.00000	.00000	.00000	.00000	.00000	.00000	.00000	.00000	
46215				.00002	.00013	.00004	.00004	.00004	.00004	.00004	.00003	.00002	.00040	140
46215	BBJH	L	L DROP TANK PRESS REGULATOR	.00002	.00013	.00004	.00004	.00004	.00004	.00004	.00003	.00002	.00040	
46215	BBJH	R	R DROP TANK PRESS REGULATOR	.00000	.00000	.00000	.00000	.00000	.00000	.00000	.00000	.00000	.00000	
4622A				.00016	.00101	.00045	.00045	.00043	.00043	.00042	.00033	.00016	.00384	48
4622A	BBKB	L	L FUEL FLOW SWITCH	.00016	.00101	.00043	.00043	.00043	.00043	.00042	.00033	.00016	.00380	
4622A	BBKB	R	R FUEL FLOW SWITCH	.00000	.00000	.00002	.00002	.00000	.00000	.00000	.00000	.00000	.00004	
46226				.00004	.00026	.00008	.00008	.00008	.00008	.00008	.00006	.00004	.00080	114
46226	BBHM	L	L DROP TANK FUEL SHUTOFF V	.00004	.00026	.00008	.00008	.00008	.00008	.00008	.00006	.00004	.00080	
46226	BBHM	R	R DROP TANK FUEL SHUTOFF V	.00000	.00000	.00000	.00000	.00000	.00000	.00000	.00000	.00000	.00000	
46227	BBKA		CL TANK FUEL FLOW SWITCH	.00000	.00000	.00002	.00002	.00000	.00000	.00000	.00000	.00000	.00004	244
46231	BBHN		CL DROP TANK	.00000	.00000	.00015	.00015	.00000	.00000	.00000	.00000	.00000	.00030	166
46232	BBHP	L	L DROP TANK	.00048	.00317	.00136	.00136	.00136	.00136	.00132	.00098	.00048	.01187	21
46233	BBHP	R	R DROP TANK	.00000	.00000	.00006	.00006	.00000	.00000	.00000	.00000	.00000	.00012	207
4631100	BBPB		AIR REFUELING PROBE ASSY	.00000	.00000	.00000	.00010	.00010	.00020	.00020	.00010	.00000	.00070	119
46314	BBPD		PROBE DOOR ACTUATOR	.00000	.00000	.00000	.00002	.00002	.00004	.00004	.00002	.00000	.00014	198
46417				.00000	.00002	.00000	.00000	.00000	.00000	.00000	.00000	.00000	.00002	268
46417	BBNK		DROP TANKS SELECTOR SWITCH	.00000	.00001	.00000	.00000	.00000	.00000	.00000	.00000	.00000	.00001	
46417	BBNM		REFUEL SELECTOR SWITCH	.00000	.00001	.00000	.00000	.00000	.00000	.00000	.00000	.00000	.00001	
46431	BBNG		FUEL LOW LEVEL SWITCH	.00000	.00008	.00002	.00003	.00002	.00004	.00004	.00002	.00000	.00025	174
46432	BBGG		FUEL LOW LEVEL SWITCH	.00000	.00003	.00000	.00000	.00000	.00000	.00000	.00000	.00000	.00003	261
46433	BBFA		WARNING LIGHT	.00000	.00000	.00000	.00000	.00000	.00001	.00001	.00000	.00000	.00002	267
47111	EDCA		LOX CONVERTER	.00000	.00000	.00034	.00068	.00068	.00034	.00000	.00000	.00000	.00272	59
47112	EDCB		LOX CONTAINER	.00000	.00000	.00004	.00008	.00008	.00008	.00004	.00000	.00000	.00032	163
47117				.00000	.00000	.00034	.00036	.00036	.00036	.00034	.00000	.00000	.00176	72

WUC	ALPHA	WUC-TITLE	CRITICALITIES BY FLIGHT PHASE PH1	PH2	PH3	PH4	PH5	PH6	PH7	PH8	PH9	TOTAL CRIT	CRIT RANK
47117	EDCC	CAPACITANCE PROBE	.00000	.00000	.00002	.00004	.00004	.00004	.00002	.00000	.00000	.00016	
47117	HDAEA	QUANTITY PROBE	.00000	.00000	.00032	.00032	.00032	.00032	.00032	.00000	.00000	.00160	
4721S			.00000	.00000	.00020	.00042	.00042	.00042	.00020	.00000	.00000	.00166	75
4721S	EDAAT	UPPER BLOCK	.00000	.00000	.00010	.00021	.00021	.00021	.00010	.00000	.00000	.00083	
4721S	EDABT	UPPER BLOCK	.00000	.00000	.00010	.00021	.00021	.00021	.00010	.00000	.00000	.00083	
4721C			.00000	.00000	.00002	.00002	.00002	.00002	.00002	.00000	.00000	.00010	212
4721C	EDAAJ	COMPOSITE DISCONNECT	.00000	.00000	.00001	.00001	.00001	.00001	.00001	.00000	.00000	.00005	
4721C	EDABJ	COMPOSITE DISCONNECT	.00000	.00000	.00001	.00001	.00001	.00001	.00001	.00000	.00000	.00005	
47213			.00000	.00000	.00000	.00001	.00001	.00001	.00000	.00000	.00000	.00003	260
47213	EDAAC	LOW WARNING LIGHT	.00000	.00000	.00000	.00001	.00001	.00001	.00000	.00000	.00000	.00003	
47213	EDABC	LOW WARNING LIGHT	.00000	.00000	.00000	.00000	.00000	.00000	.00000	.00000	.00000	.00000	
47213	HDAFA	LOX LOW WARNING LIGHT	.00000	.00000	.00000	.00000	.00000	.00000	.00000	.00000	.00000	.00000	
47215			.00000	.00000	.00004	.00009	.00009	.00009	.00004	.00000	.00000	.00035	157
47215	EDAAE	LOX FLEXIBLE HOSE	.00000	.00000	.00004	.00009	.00009	.00009	.00004	.00000	.00000	.00035	
47215	EDABE	LOX FLEXIBLE HOSE	.00000	.00000	.00000	.00000	.00000	.00000	.00000	.00000	.00000	.00000	
4721F			.00000	.00000	.00010	.00012	.00012	.00012	.00010	.00000	.00000	.00056	127
4721F	EDAAL	PRIMARY AMPLIFIER	.00000	.00000	.00000	.00001	.00001	.00001	.00000	.00000	.00000	.00003	
4721F	EDABL	PRIMARY AMPLIFIER	.00000	.00000	.00000	.00001	.00001	.00001	.00000	.00000	.00000	.00003	
4721F	HDADA	QUANTITY AMPLIFIER	.00000	.00000	.00010	.00010	.00010	.00010	.00010	.00000	.00000	.00050	
47216			.00000	.00000	.00002	.00004	.00004	.00004	.00002	.00000	.00000	.00016	190
47216	EDAAF	LOWER DISCONNECT BLOCK	.00000	.00000	.00002	.00004	.00004	.00004	.00002	.00000	.00000	.00016	
47216	EDABF	LOWER DISCONNECT BLOCK	.00000	.00000	.00000	.00000	.00000	.00000	.00000	.00000	.00000	.00000	
4721R			.00000	.00000	.00004	.00006	.00006	.00006	.00004	.00000	.00000	.00026	170
4721R	EDAAS	INTERMEDIATE BLOCK	.00000	.00000	.00002	.00003	.00003	.00003	.00002	.00000	.00000	.00013	
4721R	EDABS	INTERMEDIATE BLOCK	.00000	.00000	.00002	.00003	.00003	.00003	.00002	.00000	.00000	.00013	
49112			.00036	.00036	.00036	.00036	.00036	.00036	.00036	.00036	.00036	.00324	52
49112	HACAA L	L FIRE WARNING LIGHT	.00018	.00018	.00018	.00018	.00018	.00018	.00018	.00018	.00018	.00162	
49112	HACAA R	R FIRE WARNING LIGHT	.00018	.00018	.00018	.00018	.00018	.00018	.00018	.00018	.00018	.00162	
49122			.00020	.00020	.00020	.00020	.00020	.00020	.00020	.00020	.00020	.00180	71
49122	HACAB L	L OVERHEAT WARNING LIGHT	.00010	.00010	.00010	.00010	.00010	.00010	.00010	.00010	.00010	.00090	
49122	HACAB R	R OVERHEAT WARNING LIGHT	.00010	.00010	.00010	.00010	.00010	.00010	.00010	.00010	.00010	.00090	
51118			.00000	.00000	.00000	.00002	.00002	.00002	.00000	.00000	.00000	.00008	220
51118	EAAAB	FWD CKPT CABIN PRESS IND	.00000	.00000	.00000	.00001	.00001	.00001	.00000	.00000	.00000	.00004	
51118	EAAAH	AFT CKPT CABIN PRESS IND	.00000	.00000	.00000	.00001	.00001	.00001	.00000	.00000	.00000	.00004	
51411			.00000	.00058	.00012	.00012	.00012	.00012	.00012	.00006	.00000	.00124	47
51411	HAAAA L	TACHOMETER INDICATOR	.00000	.00029	.00006	.00006	.00006	.00006	.00006	.00003	.00000	.00062	
51411	HAAAA R	TACHOMETER INDICATOR	.00000	.00029	.00006	.00006	.00006	.00006	.00006	.00003	.00000	.00062	
51412			.00000	.00016	.00004	.00004	.00004	.00004	.00004	.00002	.00000	.00038	147
51412	HAABA L	TACHOMETER GENERATOR	.00000	.00008	.00002	.00002	.00002	.00002	.00002	.00001	.00000	.00019	
51412	HAABA R	TACHOMETER GENERATOR	.00000	.00008	.00002	.00002	.00002	.00002	.00002	.00001	.00000	.00019	
51423			.00000	.00228	.00114	.00114	.00114	.00114	.00114	.00000	.00000	.00798	31
51423	HABAA L	TEMP INDICATOR	.00000	.00114	.00057	.00057	.00057	.00057	.00057	.00000	.00000	.00399	
51423	HABAA R	TEMP INDICATOR	.00000	.00114	.00057	.00057	.00057	.00057	.00057	.00000	.00000	.00399	
51424			.00006	.00014	.00012	.00012	.00012	.00012	.00010	.00006	.00006	.00090	105
51424	HABCC L		.00003	.00005	.00005	.00005	.00005	.00005	.00004	.00003	.00003	.00038	
51424	HABCC R	EXHAUST GAS THERMOCOUPLE	.00003	.00005	.00005	.00005	.00005	.00005	.00004	.00003	.00003	.00038	
51424	BCJA L	THERMOCOUPLE SENSOR	.00000	.00000	.00000	.00000	.00000	.00000	.00000	.00000	.00000	.00000	
51424	BCJA R	THERMOCOUPLE SENSOR	.00000	.00000	.00000	.00000	.00000	.00000	.00000	.00000	.00000	.00000	
51424	HABRA L	THERMOCOUPLE	.00000	.00002	.00001	.00001	.00001	.00001	.00001	.00000	.00000	.00007	

CRITICALITY ORDERED BY WORK UNIT CODE (PAGE 11 OF 12)

WUC	ALPHA		WUC-TITLE	CRITICALITIES BY FLIGHT PHASE PH1	PH2	PH3	PH4	PH5	PH6	PH7	PH8	PH9	TOTAL CRIT	CRIT RANK
51424	HABBA	R	THERMOCOUPLE	.00000	.00002	.00001	.00001	.00001	.00001	.00001	.00000	.00000	.00007	
51433				.00052	.00052	.00052	.00052	.00052	.00052	.00052	.00052	.00052	.00468	44
51433	BCGC	L		.00026	.00026	.00026	.00026	.00026	.00026	.00026	.00026	.00026	.00234	
51433	BCGC	R	PRESSURE INDICATOR	.00026	.00026	.00026	.00026	.00026	.00026	.00026	.00026	.00026	.00234	
51434				.00012	.00012	.00012	.00012	.00012	.00012	.00012	.00012	.00012	.00108	93
51434	BCGB	L	PRESSURE TRANSMITTER	.00006	.00006	.00006	.00006	.00006	.00006	.00006	.00006	.00006	.00054	
51434	BCGB	R	PRESSURE TRANSMITTER	.00006	.00006	.00006	.00006	.00006	.00006	.00006	.00006	.00006	.00054	
51441				.00052	.00052	.00052	.00052	.00052	.00052	.00052	.00052	.00052	.00468	43
51441	BADEB	L	FUEL FLOW INDICATOR	.00026	.00026	.00026	.00026	.00026	.00026	.00026	.00026	.00026	.00234	
51441	BADEB	R	FUEL FLOW INDICATOR	.00026	.00026	.00026	.00026	.00026	.00026	.00026	.00026	.00026	.00234	
51442				.00056	.00210	.00140	.00140	.00140	.00140	.00125	.00098	.00056	.01105	23
51442	BADEA	L	FUEL FLOW TRANSMITTER	.00028	.00105	.00081	.00081	.00081	.00081	.00073	.00049	.00028	.00607	
51442	BADEA	R	FUEL FLOW TRANSMITTER	.00028	.00105	.00059	.00059	.00059	.00059	.00052	.00049	.00028	.00498	
51621				.00000	.00006	.00001	.00000	.00000	.00000	.00000	.00002	.00000	.00009	215
51621	CCJB	L		.00000	.00003	.00000	.00000	.00000	.00000	.00000	.00001	.00000	.00004	
51621	CCJB	R	AILERON POSITION INDICATOR	.00000	.00003	.00001	.00000	.00000	.00000	.00000	.00001	.00000	.00005	
51622				.00000	.00002	.00000	.00000	.00000	.00000	.00000	.00000	.00000	.00002	249
51622	CCJA	L	WING POSITION TRANSMITTER	.00000	.00001	.00000	.00000	.00000	.00000	.00000	.00000	.00000	.00001	
51622	CCJA	R	WING POSITION TRANSMITTER	.00000	.00001	.00000	.00000	.00000	.00000	.00000	.00000	.00000	.00001	
51623	CBHB		RUDDER POSITION INDICATOR	.00000	.00002	.00001	.00000	.00000	.00000	.00000	.00001	.00000	.00004	245
51624				.00000	.00006	.00001	.00001	.00001	.00001	.00001	.00005	.00000	.00016	189
51624	CBGC		RUDDER TRIM TRANSMITTER	.00000	.00005	.00001	.00001	.00001	.00001	.00001	.00005	.00000	.00015	
51624	CBHA		RUDDER POSITION TRANSMITTER	.00000	.00001	.00000	.00000	.00000	.00000	.00000	.00000	.00000	.00001	
51625	CAEA		POSITION TRANSMITTER	.00000	.00000	.00000	.00000	.00000	.00000	.00000	.00001	.00000	.00001	270
51627	CDBJB		POSITION INDICATOR	.00000	.00052	.00000	.00000	.00000	.00000	.00031	.00052	.00000	.00135	62
51628	CDBJA		POSITION TRANSMITTER	.00000	.00009	.00000	.00000	.00000	.00000	.00005	.00009	.00000	.00023	175
51637				.00000	.00004	.00004	.00004	.00004	.00004	.00004	.00004	.00000	.00028	168
51637	BABAB	L	NOZZLE POSITION INDICATOR	.00000	.00002	.00002	.00002	.00002	.00002	.00002	.00002	.00000	.00014	
51637	BABAB	R	NOZZLE POSITION INDICATOR	.00000	.00002	.00002	.00002	.00002	.00002	.00002	.00002	.00000	.00014	
51811	KCCC		PRESSURE INDICATOR	.00000	.00004	.00004	.00004	.00004	.00004	.00004	.00004	.00000	.00028	169
51812	KCCB		PRESSURE TRANSMITTER	.00000	.00001	.00001	.00001	.00001	.00001	.00001	.00001	.00000	.00007	224
51813	KDCC		PRESSURE INDICATOR	.00000	.00001	.00001	.00001	.00001	.00001	.00001	.00001	.00000	.00007	226
51814	KDCB		PRESSURE TRANSMITTER	.00000	.00001	.00001	.00001	.00001	.00001	.00001	.00001	.00000	.00007	225
51815	KECF		PRESSURE GAGE	.00000	.00002	.00002	.00002	.00002	.00002	.00002	.00002	.00000	.00014	197
51816	KECE		PRESSURE TRANSMITTER	.00000	.00001	.00001	.00001	.00001	.00001	.00001	.00001	.00000	.00007	222
51822	KGFC		PRESSURE INDICATOR	.00000	.00001	.00001	.00001	.00001	.00001	.00001	.00001	.00000	.00007	223
51823	KGFD		PRESSURE TRANSMITTER	.00000	.00001	.00001	.00001	.00001	.00001	.00001	.00001	.00000	.00007	221
51842				.00002	.00000	.00000	.00000	.00001	.00002	.00002	.00002	.00000	.00009	214
51842	HADDA		TANK NO 7 FUEL PROBE	.00000	.00000	.00000	.00000	.00000	.00000	.00000	.00000	.00000	.00000	
51842	HADDB		TANK NO 6 FUEL PROBE	.00000	.00000	.00000	.00000	.00000	.00000	.00000	.00000	.00000	.00000	
51842	HADDC		TANK NO 6 FUEL PROBE	.00000	.00000	.00000	.00000	.00000	.00000	.00000	.00000	.00000	.00000	
51842	HADDD		TANK NO 4 FUEL PROBE	.00000	.00000	.00000	.00000	.00000	.00000	.00000	.00000	.00000	.00000	
51842	HADDE		TANK NO 3 FUEL PROBE	.00000	.00000	.00000	.00000	.00000	.00000	.00000	.00000	.00000	.00000	
51842	HADDF		TANK NO 2 FUEL PROBE	.00000	.00000	.00000	.00000	.00000	.00000	.00000	.00000	.00000	.00000	
51842	HADDG		TANK NO 1 UPPER FUEL PROBE	.00002	.00000	.00000	.00000	.00001	.00002	.00002	.00002	.00000	.00009	
51842	HADEA		R O/B FUEL PROBE	.00000	.00000	.00000	.00000	.00000	.00000	.00000	.00000	.00000	.00000	
51842	HADEB		R INT FUEL PROBE	.00000	.00000	.00000	.00000	.00000	.00000	.00000	.00000	.00000	.00000	
51842	HADEC		R I/B FUEL PROBE	.00000	.00000	.00000	.00000	.00000	.00000	.00000	.00000	.00000	.00000	
51842	HADED		L O/B FUEL PROBE	.00000	.00000	.00000	.00000	.00000	.00000	.00000	.00000	.00000	.00000	

WUC	ALPHA	WUC-TITLE	CRITICALITIES BY FLIGHT PHASE PH1	PH2	PH3	PH4	PH5	PH6	PH7	PH8	PH9	TOTAL CRIT	CRIT RANK
51842	HADEE	L INT FUEL PROBE	.00000	.00000	.00000	.00000	.00000	.00000	.00000	.00000	.00000	.00000	
51843	HADCA	FUEL QUANTITY SIMULATOR	.00006	.00000	.00000	.00002	.00004	.00006	.00006	.00006	.00000	.00030	167
51844	HADAA	FUEL QUANTITY INDICATOR	.00070	.00000	.00000	.00014	.00035	.00056	.00063	.00070	.00000	.00308	53
51845			.00010	.00066	.00029	.00029	.00029	.00029	.00028	.00021	.00010	.00251	80
51845	BBEA	L L PRESSURE TRANSMITTER	.00010	.00060	.00028	.00028	.00028	.00028	.00027	.00020	.00010	.00239	
51845	BBEA	R R PRESSURE TRANSMITTER	.00000	.00006	.00001	.00001	.00001	.00001	.00001	.00001	.00000	.00012	
51846			.00008	.00057	.00025	.00025	.00025	.00025	.00024	.00018	.00008	.00215	66
51846	BBEB	L L PRESSURE INDICATOR	.00008	.00052	.00024	.00024	.00024	.00024	.00023	.00017	.00008	.00204	
51846	BBEB	R R PRESSURE INDICATOR	.00000	.00005	.00001	.00001	.00001	.00001	.00001	.00001	.00000	.00011	
51851			.00000	.00000	.00089	.00093	.00093	.00093	.00089	.00000	.00000	.00457	45
51851	EDAAA	LOX QUANTITY INDICATOR	.00000	.00000	.00003	.00005	.00005	.00005	.00003	.00000	.00000	.00021	
51851	EDABA	LOX QUANTITY INDICATOR	.00000	.00000	.00003	.00005	.00005	.00005	.00003	.00000	.00000	.00021	
51851	HDAAA	LOX QUANTITY INDICATOR	.00000	.00000	.00057	.00057	.00057	.00057	.00057	.00000	.00000	.00285	
51851	HDACA	LOX QUANTITY INDICATOR	.00000	.00000	.00026	.00026	.00026	.00026	.00026	.00000	.00000	.00130	
5711A	CFG	G LIMITING ACCELEROMETER	.00002	.00071	.00020	.00020	.00019	.00020	.00014	.00020	.00002	.00188	68
5711B	CFD	ROLL RATE GYRO	.00004	.00258	.00054	.00054	.00052	.00054	.00040	.00068	.00004	.00588	35
57112	CFA	MOTIONAL PICKUP TRANSDUCER	.00008	.00436	.00096	.00096	.00092	.00096	.00072	.00117	.00008	.01021	26
5711L	CFB	ENGAGING CONTROLLER	.00000	.00040	.00006	.00006	.00006	.00006	.00004	.00009	.00000	.00077	115
5711400	CFH	CONTROL AMPLIFIER	.00078	.04181	.00938	.00938	.00899	.00938	.00702	.01132	.00078	.09884	3
57115	CFE	YAW RATE GYRO	.00014	.00729	.00166	.00166	.00159	.00166	.00124	.00199	.00014	.01737	13
5711F	CFJ	AUTOPILOT COUPLER	.00000	.00022	.00002	.00002	.00002	.00002	.00002	.00004	.00000	.00036	148
57116	CFC	PITCH RATE GYRO	.00010	.00541	.00120	.00120	.00115	.00120	.00090	.00146	.00010	.01272	19
57117	CFF	LATERAL ACCELEROMETER	.00004	.00214	.00048	.00048	.00046	.00048	.00036	.00058	.00004	.00506	40

CRITICALITY ORDERED BY CRITICALITY (PAGE 1 OF 12)

WUC	ALPHA	WUC-TITLE	CRITICALITIES BY FLIGHT PHASE PH1	PH2	PH3	PH4	PH5	PH6	PH7	PH8	PH9	TOTAL CRIT	CRIT RANK
42127	KAMB	GENERATOR CONTROL PANEL	.03677	.16381	.10618	.14490	.14139	.14581	.10930	.11885	.03677	1.00368	1
4513C			.00764	.01554	.01000	.01008	.01020	.01044	.01132	.01728	.00792	.10042	2
4513C	KEBA	LH HYDRAULIC PUMP	.00382	.00777	.00500	.00504	.00510	.00522	.00566	.00864	.00396	.05021	
4513C	KEBB	RH HYDRAULIC PUMP	.00382	.00777	.00500	.00504	.00510	.00522	.00566	.00864	.00396	.05021	
5711400	CFH	CONTROL AMPLIFIER	.00078	.04181	.00938	.00938	.00899	.00938	.00702	.01132	.00078	.09884	3
42128	KAMA	AC POWER CONTROL BOX	.00238	.01019	.00642	.00872	.00846	.00878	.00660	.00756	.00238	.06149	4
11331			.00248	.00960	.00454	.00458	.00466	.00478	.00456	.00648	.00262	.04430	5
11331	BEAA	L AUXILLIARY AIR DOOR	.00124	.00480	.00229	.00230	.00234	.00240	.00228	.00323	.00131	.02219	
11331	BEAA	R AUXILLIARY AIR DOOR	.00124	.00480	.00226	.00228	.00232	.00238	.00228	.00325	.00131	.02212	
23A93			.00222	.00546	.00411	.00411	.00411	.00411	.00384	.00594	.00222	.03342	6
23A93	BABCB	L TEMPERATURE AMPLIFIER	.00111	.00273	.00228	.00228	.00228	.00228	.00213	.00162	.00111	.01782	
23A93	BABCB	R TEMPERATURE AMPLIFIER	.00111	.00273	.00183	.00183	.00183	.00183	.00171	.00162	.00111	.01560	
1455F			.00000	.00600	.00000	.00000	.00000	.00000	.00000	.01600	.00000	.02200	7
1455F	CDBDA	RT OUTBOARD LE UP LIMIT SW	.00000	.00060	.00000	.00000	.00000	.00000	.00000	.00160	.00000	.00220	
1455F	CDBDB	LEFT OUTBRD LE UP LIMIT SW	.00000	.00060	.00000	.00000	.00000	.00000	.00000	.00160	.00000	.00220	
1455F	CDBDC	RT INBOARD LE UP LIMIT SW	.00000	.00120	.00000	.00000	.00000	.00000	.00000	.00320	.00000	.00440	
1455F	CDBDE	RT CENTER LE UP LIMIT SW	.00000	.00060	.00000	.00000	.00000	.00000	.00000	.00160	.00000	.00220	
1455F	CDBDF	LEFT CENTER LE UP LIMIT SW	.00000	.00060	.00000	.00000	.00000	.00000	.00000	.00160	.00000	.00220	
1455F	CDBDG	RT TE UP LIMIT SWITCH	.00000	.00060	.00000	.00000	.00000	.00000	.00000	.00160	.00000	.00220	
1455F	CDBDH	LEFT TE UP LIMIT SWITCH	.00000	.00060	.00000	.00000	.00000	.00000	.00000	.00160	.00000	.00220	
1455F	CDBDJ	RT TE HALF UP LIMIT SWITCH	.00000	.00060	.00000	.00000	.00000	.00000	.00000	.00160	.00000	.00220	
1455F	CDBDK	LEFT TE HALF UP LIMIT SW	.00000	.00060	.00000	.00000	.00000	.00000	.00000	.00160	.00000	.00220	
13152	DBAA	LG EMER AIR SELECTOR VALVE	.00240	.00240	.00240	.00240	.00240	.00240	.00240	.00248	.00240	.02168	8
4513D	KEBC	SYSTEM ACCUMULATOR	.00171	.00329	.00207	.00208	.00210	.00213	.00226	.00360	.00177	.02101	9
23A6A			.00164	.00260	.00227	.00227	.00227	.00227	.00215	.00196	.00164	.01907	10
23A6A	BABBS	L NOZZLE AREA CONTROL VALVE	.00082	.00130	.00119	.00119	.00119	.00119	.00112	.00098	.00082	.00960	
23A6A	BABBS	R NOZZLE AREA CONTROL VALVE	.00082	.00130	.00108	.00108	.00108	.00108	.00103	.00098	.00082	.00927	
2318700	BCAB	R OIL TUBING	.00056	.00382	.00196	.00208	.00216	.00216	.00182	.00258	.00056	.01770	11
29311			.00062	.00396	.00219	.00219	.00217	.00219	.00198	.00152	.00062	.01744	12
29311	BGAAA	THROTTLE LEVER	.00020	.00084	.00049	.00049	.00049	.00049	.00042	.00032	.00020	.00394	
29311	BGAAA	L THROTTLE LEVER	.00021	.00156	.00101	.00101	.00100	.00101	.00093	.00060	.00021	.00794	
29311	BGAAA	R THROTTLE LEVER	.00021	.00156	.00069	.00069	.00068	.00069	.00063	.00060	.00021	.00596	
57115	CFE	YAW RATE GYRO	.00014	.00729	.00166	.00166	.00159	.00166	.00124	.00199	.00014	.01737	13
13153	DBBC	100 CU IN AIR BOTTLE	.00192	.00192	.00192	.00192	.00192	.00192	.00192	.00200	.00192	.01736	14
13111			.00165	.00170	.00167	.00167	.00165	.00167	.00167	.00234	.00165	.01567	15
13111	DAEA	LANDING GEAR CONTROL HANDLE	.00165	.00170	.00167	.00167	.00165	.00167	.00167	.00234	.00165	.01567	
13111	DBDA	LANDING GEAR CONTROL HANDLE	.00000	.00000	.00000	.00000	.00000	.00000	.00000	.00000	.00000	.00000	
13112	DADB	LANDING GEAR HANDLE SWITCH	.00156	.00178	.00152	.00153	.00153	.00153	.00152	.00165	.00160	.01422	16
1118400	JAJA	CANOPY	.00156	.00156	.00156	.00156	.00156	.00156	.00156	.00156	.00156	.01404	17
14555			.00106	.00246	.00106	.00106	.00106	.00106	.00212	.00268	.00106	.01362	18
14555	CDBBDAL	LEFT TE ACTUATING CYLINDER	.00053	.00123	.00053	.00053	.00053	.00053	.00106	.00134	.00053	.00681	
14555	CDBBDAR	RIGHT TE ACTUATING CYLINDER	.00053	.00123	.00053	.00053	.00053	.00053	.00106	.00134	.00053	.00681	
57116	CFC	PITCH RATE GYRO	.00010	.00541	.00120	.00120	.00115	.00120	.00090	.00146	.00010	.01272	19
13121	DACA	LANDING GEAR SELECTOR VALVE	.00134	.00135	.00134	.00134	.00134	.00134	.00134	.00135	.00134	.01208	20
46232	BBHP	L L DROP TANK	.00048	.00317	.00136	.00136	.00136	.00136	.00132	.00098	.00048	.01167	21
42143	KHBA	AIRSPEED SWITCH	.00050	.00167	.00115	.00175	.00168	.00177	.00125	.00134	.00050	.01156	22
51442			.00056	.00210	.00140	.00140	.00140	.00140	.00125	.00098	.00056	.01105	23
51442	BADEA	L FUEL FLOW TRANSMITTER	.00028	.00105	.00081	.00081	.00081	.00081	.00073	.00049	.00028	.00607	

WUC	ALPHA	UNITTITLE	CRITICALITIES BY FLIGHT PHASE PH1	PH2	PH3	PH4	PH5	PH6	PH7	PH8	PH9	TOTAL CRIT	CRIT RANK
51442	BADB A R	FUEL FLOW TRANSMITTER	.00026	.00026	.00059	.00059	.00059	.00059	.00059	.00049	.00024	.00401	
46171	BBLC L	L WING TANK	.00044	.00288	.00125	.00125	.00125	.00125	.00125	.00044	.00044	.01064	24
42122	KASC	PILOT GENERATOR CONTROL PANEL	.00032	.00172	.00094	.00192	.00179	.00192	.00096	.00104	.00032	.01034	25
57112	CFA	ROTATIONAL PICKOFF TRANSDUCER	.00084	.00456	.00096	.00096	.00092	.00096	.00072	.00117	.00008	.01021	26
4513A	KEDA	RESERVOIR	.00027	.00225	.00087	.00082	.00084	.00090	.00103	.00281	.00027	.01003	27
29316	BGAAD	TELESCOPING UNIT	.00048	.00202	.00127	.00127	.00127	.00127	.00107	.00078	.00048	.00991	28
44112			.00075	.00082	.00095	.00105	.00103	.00103	.00102	.00096	.00089	.00850	29
44112	EEAAR	COCKPIT CONTROL PANEL	.00000	.00000	.00000	.00000	.00000	.00000	.00000	.00000	.00000	.00000	
44112	EECA	COCKPIT LIGHTS CONTROL PNL	.00000	.00000	.00000	.00000	.00000	.00000	.00000	.00000	.00000	.00000	
44112	EECB	COCKPIT LIGHTS CONTROL PANEL	.00000	.00000	.00000	.00000	.00000	.00000	.00000	.00000	.00000	.00000	
44112	KAR2	LIGHT CONTROL PANEL	.00075	.00082	.00095	.00105	.00103	.00103	.00102	.00096	.00089	.00850	
42131			.00038	.00179	.00072	.00088	.00088	.00088	.00094	.00127	.00042	.00816	30
42131	KBEA	TRANSFORMER RECTIFIER	.00019	.00102	.00053	.00050	.00050	.00050	.00054	.00073	.00021	.00457	
42131	KBGA	TRANSFORMER RECTIFIER	.00019	.00077	.00034	.00038	.00038	.00038	.00040	.00054	.00021	.00359	
51423			.00000	.00228	.00114	.00114	.00114	.00114	.00114	.00000	.00000	.00798	31
51423	HABAA L	TEMP INDICATOR	.00000	.00114	.00057	.00057	.00057	.00057	.00057	.00000	.00000	.00399	
51423	HABAA R	TEMP INDICATOR	.00000	.00114	.00057	.00057	.00057	.00057	.00057	.00000	.00000	.00399	
42121			.00000	.00044	.00022	.00176	.00176	.00176	.00022	.00044	.00000	.00660	32
42121	KAUA L	LH GENERATOR	.00000	.00022	.00011	.00088	.00088	.00088	.00011	.00022	.00000	.00330	
42121	KAUA R	RH GENERATOR	.00000	.00022	.00011	.00088	.00088	.00088	.00011	.00022	.00000	.00330	
14540	CDBAD R	TE RIGHT FLAP	.00066	.00086	.00066	.00066	.00066	.00066	.00072	.00103	.00066	.00694	33
45134	KEAD	MANIFOLD	.00065	.00087	.00063	.00063	.00063	.00063	.00063	.00086	.00065	.00614	34
57118	CFD	ROLL RATE GYRO	.00004	.00259	.00054	.00054	.00052	.00054	.00041	.00069	.00004	.00588	35
13211			.00064	.00064	.00064	.00064	.00064	.00064	.00064	.00068	.00064	.00580	36
13211	DAAAAAL		.00016	.00016	.00016	.00016	.00016	.00016	.00016	.00018	.00016	.00146	
13211	DAAAAAR	RMLG SHOCK STRUT	.00016	.00016	.00016	.00016	.00016	.00016	.00016	.00018	.00016	.00146	
13211	DABABAL	LMLG SHOCK STRUT	.00016	.00016	.00016	.00016	.00016	.00016	.00016	.00016	.00016	.00144	
13211	DABABAR	RMLG SHOCK STRUT	.00016	.00016	.00016	.00016	.00016	.00016	.00016	.00016	.00016	.00144	
23A63			.00016	.00112	.00072	.00072	.00072	.00072	.00065	.00046	.00016	.00543	37
23A63	BADBB L	TORQUE BOOSTER CONTROL	.00008	.00056	.00043	.00043	.00043	.00043	.00039	.00023	.00008	.00306	
23A63	BADBB R	TORQUE BOOSTER CONTROL	.00008	.00056	.00029	.00029	.00029	.00029	.00026	.00023	.00008	.00237	
29310	BGAAC	TELEFLEX UNIT	.00026	.00110	.00069	.00069	.00069	.00069	.00056	.00044	.00026	.00538	38
29C15	BGABA	INTEGRATED TORQUE BOOSTER	.00022	.00090	.00070	.00070	.00070	.00070	.00065	.00042	.00022	.00521	39
57117	CFF	LATERAL ACCELEROMETER	.00004	.00214	.00048	.00048	.00048	.00048	.00036	.00058	.00004	.00506	40
45135	KEBD	ACCUMULATOR GAGE	.00042	.00087	.00048	.00048	.00050	.00050	.00050	.00081	.00044	.00500	41
23A6210			.00016	.00112	.00061	.00061	.00061	.00061	.00062	.00046	.00016	.00496	42
23A6210	BADA	INLET TEMPERATURE SENSOR	.00008	.00056	.00037	.00037	.00037	.00037	.00037	.00023	.00008	.00240	
23A6210	BAD	R INLET TEMPERATURE SENSOR	.00008	.00056	.00024	.00024	.00024	.00024	.00025	.00023	.00008	.00216	
51441			.00052	.00052	.00052	.00052	.00052	.00052	.00052	.00052	.00052	.00468	43
51441	BADEB L	FUEL FLOW INDICATOR	.00026	.00026	.00026	.00026	.00026	.00026	.00026	.00026	.00026	.00234	
51441	BADEB R	FUEL FLOW INDICATOR	.00026	.00026	.00026	.00026	.00026	.00026	.00026	.00026	.00026	.00234	
51433			.00052	.00052	.00052	.00052	.00052	.00052	.00052	.00052	.00052	.00468	44
51433	BCGC L		.00026	.00026	.00026	.00026	.00026	.00026	.00026	.00026	.00026	.00234	
51433	BCGC R	PRESSURE INDICATOR	.00026	.00026	.00026	.00026	.00026	.00026	.00026	.00026	.00026	.00234	
51851			.00000	.00001	.00089	.00093	.00093	.00093	.00089	.00000	.00000	.00457	45
51851	EDAAA	LOX QUANTITY INDICATOR	.00001	.00000	.00003	.00005	.00005	.00005	.00003	.00000	.00000	.00021	
51851	EDABA	LOX QUANTITY INDICATOR	.00001	.00000	.00003	.00005	.00005	.00005	.00003	.00000	.00000	.00021	
51851	HDAAA	LOX QUANTITY INDICATOR	.00001	.00000	.00057	.00057	.00057	.00057	.00057	.00000	.00000	.00285	
51851	HDACA	LOX QUANTITY INDICATOR	.00001	.00000	.00026	.00026	.00026	.00026	.00026	.00000	.00000	.00130	

WUC	ALPHA		AUC-TITLE	CRITICALITIES BY FLIGHT PHASE PH1	PH2	PH3	PH4	PH5	PH6	PH7	PH8	PH9	TOTAL CRIT	CRIT RANK
14507	CDB		FLAP CONTROL SYSTEM	.00045	.00059	.00045	.00045	.00045	.00045	.00050	.00068	.00045	.00447	46
23A8P				.00032	.00051	.00046	.00046	.00046	.00046	.00044	.00042	.00032	.00392	47
23A8R	BABDA	L	NOZZLE PUMP	.00016	.00029	.00023	.00023	.00023	.00023	.00022	.00021	.00016	.00196	
23A8S	BABCA	R	NOZZLE PUMP	.00016	.00029	.00023	.00023	.00023	.00023	.00022	.00021	.00016	.00196	
46224				.00016	.00101	.00045	.00045	.00043	.00043	.00042	.00033	.00016	.00384	48
46224	BBKR	L	L FUEL FLOW SWITCH	.00016	.00101	.00043	.00043	.00043	.00043	.00042	.00033	.00016	.00380	
46224	BBKB	R	R FUEL FLOW SWITCH	.00000	.00000	.00002	.00002	.00000	.00000	.00000	.00000	.00000	.00004	
41552	CDAEB		LIMIT SWITCH	.00042	.00042	.00042	.00042	.00042	.00042	.00042	.00042	.00042	.00378	49
13347	ABABA		FOLLOW UP POTENTIOMETER	.00020	.00163	.00000	.00000	.00000	.00000	.00000	.00143	.00020	.00346	50
11334				.00020	.00078	.00032	.00032	.00032	.00032	.00030	.00065	.00022	.00343	51
11334	BEDA	L	AUX AIR DOOR SELECTOR VALVE	.00010	.00039	.00016	.00016	.00016	.00016	.00015	.00032	.00011	.00171	
11334	BEDA	R	AUX AIR DOOR SELECTOR VALVE	.00010	.00039	.00016	.00016	.00016	.00016	.00015	.00033	.00011	.00172	
49112				.00036	.00036	.00036	.00036	.00036	.00036	.00036	.00036	.00036	.00324	52
49112	HACAA	L	L FIRE WARNING LIGHT	.00018	.00018	.00018	.00018	.00018	.00018	.00018	.00018	.00018	.00162	
49112	HACAA	R	2 FIRE WARNING LIGHT	.00018	.00018	.00018	.00018	.00018	.00018	.00018	.00018	.00018	.00162	
51844	HADAA		FUEL QUANTITY INDICATOR	.00070	.00000	.00000	.00014	.00035	.00056	.00063	.00070	.00000	.00308	53
42210				.00000	.00020	.00010	.00082	.00082	.00082	.00010	.00020	.00000	.00306	54
42210	KAUB	L	LH CONSTANT SPEED DRIVE	.00000	.00010	.00005	.00041	.00041	.00041	.00005	.00010	.00000	.00153	
42210	KAUB	R	RH CONSTANT SPEED DRIVE	.00000	.00010	.00005	.00041	.00041	.00041	.00005	.00010	.00000	.00153	
13234				.00032	.00032	.00032	.00032	.00032	.00032	.00032	.00036	.00032	.00292	55
13234	DAAAAPL		LMLG STRUT DOOR	.00008	.00008	.00008	.00008	.00008	.00008	.00008	.00010	.00008	.00074	
13234	DAAAAPR		RMLG STRUT DOOR	.00008	.00008	.00008	.00008	.00008	.00008	.00008	.00010	.00008	.00074	
13234	DABABDR		RMLG STRUT DOOR	.00008	.00008	.00008	.00008	.00008	.00008	.00008	.00008	.00008	.00072	
13234	DABABPL		LMLG STRUT DOOR	.00008	.00008	.00008	.00008	.00008	.00008	.00008	.00008	.00008	.00072	
1455J	CDBGA		FLAP CONTROL SWITCH	.00000	.00070	.00024	.00024	.00024	.00024	.00042	.00082	.00000	.00290	56
29312	BGAAB		FRICTION LOCK	.00014	.00060	.00035	.00035	.00035	.00035	.00026	.00014	.00029	.00289	57
14553				.00000	.00080	.00020	.00020	.00020	.00020	.00032	.00096	.00000	.00288	58
14553	CDBCBA		HYD FLOW DIVIDER	.00000	.00040	.00010	.00010	.00010	.00010	.00016	.00048	.00000	.00144	
14553	CDBCCA		HYD FLOW DIVIDER	.00000	.00040	.00010	.00010	.00010	.00010	.00016	.00048	.00000	.00144	
47111	EDCA		LOX CONVERTER	.00000	.00000	.00034	.00068	.00068	.00068	.00034	.00000	.00000	.00272	59
51845				.00010	.00066	.00029	.00029	.00029	.00029	.00028	.00021	.00010	.00251	60
51845	BBEA	L	L PRESSURE TRANSMITTER	.00010	.00060	.00028	.00028	.00028	.00028	.00027	.00020	.00010	.00239	
51845	BBEA	R	R PRESSURE TRANSMITTER	.00000	.00006	.00001	.00001	.00001	.00001	.00001	.00000	.00000	.00012	
13321				.00026	.00026	.00026	.00026	.00026	.00026	.00026	.00026	.00026	.00234	61
13321	DAABAG		NLG UPLOCK ACTUATOR	.00024	.00024	.00024	.00024	.00024	.00024	.00024	.00024	.00024	.00216	
13321	DABBAA		NLG UPLOCK ACTUATOR	.00002	.00002	.00002	.00002	.00002	.00002	.00002	.00002	.00002	.00018	
123A3	JAHAAB		RELEASE	.00000	.00017	.00036	.00046	.00046	.00046	.00040	.00010	.00000	.00234	62
23A92				.00019	.00034	.00026	.00026	.00026	.00026	.00024	.00024	.00018	.00222	63
23A92	BABCA	L	CONTROL ALTERNATOR	.00009	.00017	.00013	.00013	.00013	.00013	.00012	.00012	.00009	.00111	
23A92	BABCA	R	CONTROL ALTERNATOR	.00009	.00017	.00013	.00013	.00013	.00013	.00012	.00012	.00009	.00111	
13212	DABABBR		RMLG SHRINK MECHANISM	.00024	.00024	.00024	.00024	.00024	.00024	.00024	.00028	.00024	.00220	64
23AA4				.00008	.00036	.00031	.00031	.00031	.00031	.00024	.00016	.00008	.00216	65
23AA4	BARBA	L	AFTERBURNER IGNITION SWITCH	.00004	.00018	.00020	.00020	.00020	.00020	.00016	.00008	.00004	.00130	
23AA4	BARBA	R	AFTERBURNER IGNITION SWITCH	.00004	.00018	.00011	.00011	.00011	.00011	.00008	.00008	.00004	.00086	
51846				.00008	.00057	.00025	.00025	.00025	.00025	.00024	.00018	.00008	.00215	66
51846	BBEB	L	L PRESSURE INDICATOR	.00008	.00053	.00024	.00024	.00024	.00024	.00023	.00017	.00008	.00204	
51846	BBEB	R	R PRESSURE INDICATOR	.00001	.00005	.00001	.00001	.00001	.00001	.00001	.00001	.00000	.00011	
13232				.00022	.00022	.00022	.00022	.00022	.00022	.00022	.00022	.00022	.00198	67
13232	DAAABCL		LMLG INNER DOOR BELLCRANK	.00010	.00010	.00010	.00010	.00010	.00010	.00010	.00010	.00010	.00090	

CRITICALITY ORDERED BY CRITICALITY (PAGE 4 OF 12)

WUC	ALPHA	WUC-TITLE	CRITICALITIES BY FLIGHT PHASE PH1	PH2	PH3	PH4	PH5	PH6	PH7	PH8	PH9	TOTAL CRIT	CRIT RANK
13232	DAAAHCR	RMLG INBD DOOR BELLCRANK	.00010	.00010	.00010	.00010	.00010	.00010	.00010	.00010	.00010	.00090	
13232	DABAADL	LMLG INBD DOOR BELLCRANK	.00001	.00001	.00001	.00001	.00001	.00001	.00001	.00001	.00001	.00009	
13232	DABAADR	RMLG INBD DOOR BELLCRANK	.00001	.00001	.00001	.00001	.00001	.00001	.00001	.00001	.00001	.00009	
57114	CFG	G LIMITING ACCELEROMETER	.00002	.00071	.00020	.00020	.00019	.00020	.00014	.00020	.00002	.00188	68
1455E	CDB0L	FLAP AIRSPEED SWITCH	.00007	.00049	.00012	.00012	.00012	.00012	.00027	.00059	.00000	.00183	69
14823			.00018	.00024	.00020	.00020	.00018	.00020	.00020	.00024	.00018	.00182	70
14823	ABBDA R	WING SPREAD LIMIT SWITCH	.00009	.00012	.00010	.00010	.00009	.00010	.00010	.00012	.00009	.00091	
14823	ABBDB L	WING SPREAD LIMIT-SWITCH	.00009	.00012	.00010	.00010	.00009	.00010	.00010	.00012	.00009	.00091	
49122			.00020	.00020	.00020	.00020	.00020	.00020	.00020	.00020	.00020	.00180	71
49122	HACAB L	L OVERHEAT WARNING LIGHT	.00010	.00010	.00010	.00010	.00010	.00010	.00010	.00010	.00010	.00090	
49122	HACAB R	R OVERHEAT WARNING LIGHT	.00010	.00010	.00010	.00010	.00010	.00010	.00010	.00010	.00010	.00090	
47117			.00000	.00000	.00034	.00036	.00036	.00036	.00034	.00000	.00000	.00176	72
47117	EDCG	CAPACITANCE PROBE	.00000	.00000	.00002	.00004	.00004	.00004	.00002	.00000	.00000	.00016	
47117	HDAEA	QUANTITY PROBE	.00000	.00000	.00032	.00032	.00032	.00032	.00032	.00000	.00000	.00160	
42120			.00020	.00020	.00016	.00020	.00020	.00020	.00016	.00020	.00020	.00172	73
42120	KAJA	28VAC AUTO TRANSFORMER	.00010	.00010	.00008	.00010	.00010	.00010	.00008	.00010	.00010	.00086	
42120	KAKA	28VAC AUTO TRANSFORMER	.00010	.00010	.00008	.00010	.00010	.00010	.00008	.00010	.00010	.00086	
4112E	EAAGG	RUPTURE DISC	.00000	.00004	.00008	.00048	.00048	.00048	.00008	.00004	.00000	.00168	74
4721S			.00000	.00000	.00020	.00042	.00042	.00042	.00020	.00000	.00000	.00166	75
4721S	EDAAT	UPPER BLOCK	.00000	.00000	.00010	.00021	.00021	.00021	.00010	.00000	.00000	.00083	
4721S	EDABT	UPPER BLOCK	.00000	.00000	.00010	.00021	.00021	.00021	.00010	.00000	.00000	.00083	
45112	KCBA	HYDRAULIC PUMP	.00000	.00026	.00022	.00022	.00022	.00022	.00022	.00026	.00000	.00162	76
14818			.00016	.00020	.00018	.00018	.00016	.00018	.00018	.00020	.00016	.00160	77
14818	ABBAE R	W/F PIN ACTUATOR BAR	.00008	.00010	.00009	.00009	.00008	.00009	.00009	.00010	.00008	.00080	
14818	ABBAF L	W/F PIN ACTUATOR BAR	.00008	.00010	.00009	.00009	.00008	.00009	.00009	.00010	.00008	.00080	
14115	CCHC	TRIM SWITCH	.00000	.00036	.00017	.00016	.00016	.00016	.00016	.00033	.00000	.00150	78
13210			.00016	.00016	.00016	.00016	.00016	.00016	.00016	.00016	.00016	.00144	79
13210	DAAAAER	RMLG SIDEBRACE ACTUATOR	.00008	.00008	.00008	.00008	.00008	.00008	.00008	.00008	.00008	.00072	
13210	DABABER	RMLG SIDEBRACE ACTUATOR	.00008	.00008	.00008	.00008	.00008	.00008	.00008	.00008	.00008	.00072	
12310	JAHCL		.00000	.00006	.00022	.00028	.00028	.00028	.00024	.00006	.00000	.00142	80
46112			.00006	.00036	.00015	.00015	.00015	.00015	.00015	.00013	.00006	.00136	81
46112	BBMA L	L WING TANK PRESS REGULATOR	.00006	.00036	.00015	.00015	.00015	.00015	.00015	.00013	.00006	.00136	
46112	BBMA R	R WING TANK PRESS REGULATOR	.00000	.00000	.00000	.00000	.00000	.00000	.00000	.00000	.00000	.00000	
51627	CDBJB	POSITION INDICATOR	.00000	.00052	.00000	.00000	.00000	.00000	.00031	.00052	.00000	.00135	82
45122	KDBA	HYDRAULIC PUMP	.00000	.00021	.00018	.00018	.00018	.00018	.00018	.00022	.00000	.00133	83
13143	DAABAA	NOSE GEAR DWN LIMIT SWITCH	.00010	.00027	.00008	.00008	.00008	.00008	.00008	.00044	.00010	.00131	84
23A65			.00008	.00026	.00016	.00016	.00016	.00016	.00014	.00010	.00004	.00130	85
23A65	BADCA L		.00004	.00013	.00008	.00008	.00008	.00008	.00007	.00005	.00004	.00065	
23A65	BADCA R	PRESSURIZE AND DUMP VALVE	.00004	.00013	.00008	.00008	.00008	.00008	.00007	.00005	.00004	.00065	
41125			.00000	.00000	.00006	.00037	.00037	.00037	.00010	.00000	.00000	.00127	86
41125	EAADC	CABIN DUAL TEMP MIXING VALV	.00000	.00000	.00006	.00022	.00022	.00022	.00010	.00000	.00000	.00082	
41125	EAAFB	CABIN MIXING VALVE	.00000	.00000	.00000	.00015	.00015	.00015	.00000	.00010	.00000	.00045	
51411			.00000	.00058	.00012	.00012	.00012	.00012	.00012	.00006	.00000	.00124	87
51411	HAAAA L	TACHOMETER INDICATOR	.00000	.00029	.00006	.00006	.00006	.00006	.00006	.00003	.00000	.00062	
51411	HAAAA R	TACHOMETER INDICATOR	.00000	.00029	.00006	.00006	.00006	.00006	.00006	.00003	.00000	.00062	
23A81			.00010	.00018	.00014	.00014	.00014	.00014	.00014	.00012	.00010	.00120	88
23A81	8CDA L	MAIN OIL PUMP	.00005	.00009	.00007	.00007	.00007	.00007	.00007	.00006	.00005	.00060	
23A81	8CDA R	MAIN OIL PUMP	.00005	.00009	.00007	.00007	.00007	.00007	.00007	.00006	.00005	.00060	
23A1140			.00004	.00024	.00018	.00020	.00020	.00020	.00006	.00004	.00004	.00120	89

CRITICALITY ORDERED BY CRITICALITY (PAGE 5 OF 12)

WUC	ALPHA	WUC-TITLE	CRITICALITIES BY FLIGHT PHASE PH1	PH2	PH3	PH4	PH5	PH6	PH7	PH8	PH9	TOTAL CRIT	CRIT RANK
23A1140	BAJAB L	GUIDE VANE	.00002	.00012	.00009	.00010	.00010	.00010	.00003	.00002	.00002	.00060	
23A1140	BAJAB R	GUIDE VANE	.00002	.00012	.00009	.00010	.00010	.00010	.00003	.00002	.00002	.00060	
14510			.00012	.00016	.00012	.00012	.00012	.00012	.00014	.00018	.00012	.00120	90
14510	CDBAC L	LE INBOARD LEFT FLAP	.00006	.00008	.00006	.00006	.00006	.00006	.00007	.00009	.00006	.00060	
14510	CDBAC R	LE INBOARD RIGHT FLAP	.00006	.00008	.00006	.00006	.00006	.00006	.00007	.00009	.00006	.00060	
45211	KGBA	MOISTURE SEPARATOR	.00000	.00002	.00004	.00008	.00008	.00008	.00004	.00076	.00000	.00110	91
45216	KGAA	GROUND CHARGING AIR VALVE	.00012	.00012	.00012	.00012	.00012	.00012	.00012	.00012	.00012	.00108	92
51434			.00012	.00012	.00012	.00012	.00012	.00012	.00012	.00012	.00012	.00108	93
51434	BCGB L	PRESSURE TRANSMITTER	.00006	.00006	.00006	.00006	.00006	.00006	.00006	.00006	.00006	.00054	
51434	BCGB R	PRESSURE TRANSMITTER	.00006	.00006	.00006	.00006	.00006	.00006	.00006	.00006	.00006	.00054	
46210			.00004	.00029	.00013	.00013	.00013	.00013	.00012	.00007	.00004	.00108	94
46210	BBJG L	L DROP TANK PRESS/VENT V	.00004	.00029	.00013	.00013	.00013	.00013	.00012	.00007	.00004	.00108	
46210	BBJG R	R DROP TANK PRESS/VENT V	.00000	.00000	.00000	.00000	.00000	.00000	.00000	.00000	.00000	.00000	
46118			.00004	.00028	.00013	.00013	.00013	.00013	.00012	.00007	.00004	.00107	95
46118	BBMD L		.00004	.00028	.00013	.00013	.00013	.00013	.00012	.00007	.00004	.00107	
46118	BBMD R	R WING PRESS/VENT VALVE	.00000	.00000	.00000	.00000	.00000	.00000	.00000	.00000	.00000	.00000	
41115	EAABE	CABIN TEMPERATURE SENSOR	.00000	.00008	.00008	.00024	.00024	.00024	.00008	.00008	.00000	.00104	96
14332	CACB	BELLOWS ASSY	.00000	.00018	.00013	.00012	.00012	.00012	.00012	.00020	.00000	.00099	97
23A91			.00008	.00012	.00012	.00012	.00012	.00012	.00010	.00008	.00008	.00094	98
23A91	BABCD L	BRANCHED CABLE	.00004	.00004	.00006	.00006	.00006	.00006	.00005	.00004	.00004	.00047	
23A91	BABCD R	BRANCHED CABLE	.00004	.00006	.00006	.00006	.00006	.00006	.00005	.00004	.00004	.00047	
14423	CBBA	RUDDER POWER CONTROL CYL	.00000	.00033	.00009	.00006	.00006	.00006	.00006	.00027	.00000	.00093	99
23A7140			.00004	.00022	.00010	.00010	.00010	.00010	.00010	.00012	.00004	.00092	100
23A7140	BAQCF L	ON/OFF VALVE	.00002	.00011	.00005	.00005	.00005	.00005	.00005	.00006	.00002	.00046	
23A7140	BAQCF R	ON/OFF VALVE	.00002	.00011	.00005	.00005	.00005	.00005	.00005	.00006	.00002	.00046	
12342	JAHABA	LATCH	.00000	.00004	.00014	.00018	.00018	.00018	.00016	.00004	.00000	.00092	101
41113	EAABD	MAGNETIC AMPLIFIER	.00000	.00007	.00007	.00021	.00021	.00021	.00007	.00007	.00000	.00091	102
45123	KOBB	ACCUMULATOR	.00000	.00015	.00012	.00012	.00012	.00012	.00012	.00016	.00000	.00091	103
41128	EAAFD	COOLING TURBINE	.00000	.00050	.00000	.00030	.00030	.00030	.00000	.00000	.00000	.00090	104
51424			.00006	.00014	.00012	.00012	.00012	.00012	.00010	.00006	.00006	.00090	105
51424	BABCC L		.00003	.00005	.00005	.00005	.00005	.00005	.00004	.00003	.00003	.00038	
51424	BABCC R	EXHAUST GAS THERMOCOUPLE	.00003	.00005	.00005	.00005	.00005	.00005	.00004	.00003	.00003	.00038	
51424	BCJA L	THERMOCOUPLE SENSOR	.00000	.00000	.00000	.00000	.00000	.00000	.00000	.00000	.00000	.00000	
51424	BCJA R	THERMOCOUPLE SENSOR	.00000	.00000	.00000	.00000	.00000	.00000	.00000	.00000	.00000	.00000	
51424	HABBA L	THERMOCOUPLE	.00000	.00002	.00001	.00001	.00001	.00001	.00001	.00000	.00000	.00007	
51424	HABBA R	THERMOCOUPLE	.00000	.00002	.00001	.00001	.00001	.00001	.00001	.00000	.00000	.00007	
13210	DABABEL	LMLG SIDEBRACE ACTUATOR	.00010	.00010	.00010	.00010	.00010	.00010	.00010	.00010	.00010	.00090	106
23A4480			.00008	.00012	.00011	.00011	.00011	.00011	.00008	.00008	.00008	.00088	107
23A4480	BABBE L	NOZZLE FLAP	.00004	.00006	.00006	.00006	.00006	.00006	.00004	.00004	.00004	.00046	
23A4480	BABBE R	NOZZLE FLAP	.00004	.00006	.00005	.00005	.00005	.00005	.00004	.00004	.00004	.00042	
23A4470			.00008	.00012	.00011	.00011	.00011	.00011	.00008	.00008	.00008	.00088	108
23A4470	BABBB L	SUPPORT RING	.00004	.00006	.00006	.00006	.00006	.00006	.00004	.00004	.00004	.00046	
23A4470	BABBB R	SUPPORT RING	.00004	.00004	.00005	.00005	.00005	.00005	.00004	.00004	.00004	.00042	
4112F	EAAJA	BLD AR PRES REG + SHTOF VLV	.00000	.00001	.00006	.00024	.00024	.00024	.00008	.00001	.00000	.00088	109
41216	EAAAD	CABIN PRESSURE REGULATOR	.00000	.00000	.00008	.00021	.00021	.00021	.00013	.00000	.00000	.00084	110
45210	KGCA	HYD DRIVE COMPRESSOR	.00000	.00006	.00006	.00018	.00018	.00018	.00006	.00012	.00000	.00084	111
14627	CEDA	SPEED BRAKE CONTROL SWITCH	.00000	.00000	.00000	.00000	.00010	.00010	.00024	.00040	.00000	.00084	112
12315	JAHCE	RETRACT CYLINDER	.00000	.00004	.00012	.00016	.00016	.00016	.00014	.00004	.00000	.00082	113
46226			.00004	.00026	.00008	.00008	.00008	.00008	.00008	.00006	.00004	.00080	114

WUC	ALPHA	SUB-TITLE	CRITICALITIES BY FLIGHT PHASE PH1	PH2	PH3	PH4	PH5	PH6	PH7	PH8	PH9	TOTAL CRIT	CRIT RANK
46226	BBHM L	L DROP TANK FUEL SHUTOFF V	.00004	.00026	.00008	.00008	.00006	.00008	.00008	.00006	.00004	.00080	
46226	BBHM R	R DROP TANK FUEL SHUTOFF V	.00000	.00000	.00000	.00000	.00000	.00000	.00000	.00000	.00000	.00000	
5711L	CFB	ENGAGING CONTROLLER	.00000	.00040	.00006	.00006	.00006	.00006	.00004	.00009	.00000	.00077	115
23A73			.00004	.00022	.00008	.00008	.00008	.00008	.00004	.00010	.00004	.00076	116
23A73	BAQAD L	PRESSURIZING VALVE	.00002	.00011	.00004	.00004	.00004	.00004	.00002	.00005	.00002	.00038	
23A73	BAQAD R	PRESSURIZING VALVE	.00002	.00011	.00004	.00004	.00004	.00004	.00002	.00005	.00002	.00038	
11333			.00026	.00000	.00000	.00000	.00000	.00000	.00000	.00000	.00048	.00074	117
11333	BEBA L	WARNING LIGHT	.00013	.00000	.00000	.00000	.00000	.00000	.00000	.00000	.00024	.00037	
11333	BEBA R	WARNING LIGHT	.00013	.00000	.00000	.00000	.00000	.00000	.00000	.00000	.00024	.00037	
45124	KDDA	RESERVOIR	.00000	.00011	.00010	.00010	.00010	.00010	.00010	.00012	.00000	.00073	118
4631100	B8PR	AIR REFUELING PROBE ASSY	.00000	.00000	.00000	.00010	.00010	.00020	.00020	.00010	.00000	.00070	119
23A4340			.00000	.00022	.00008	.00008	.00008	.00008	.00006	.00004	.00000	.00064	120
23A4340	BARAA L	TORCH IGNITER	.00000	.00011	.00004	.00004	.00004	.00004	.00003	.00002	.00000	.00032	
23A4340	BARAA R	TORCH IGNITER	.00000	.00011	.00004	.00004	.00004	.00004	.00003	.00002	.00000	.00032	
14552			.00001	.00007	.00007	.00007	.00007	.00007	.00007	.00017	.00001	.00061	121
14552	CDBCAA	HYD SOL SELECTOR VALVE	.00001	.00005	.00005	.00005	.00005	.00005	.00005	.00011	.00001	.00043	
14552	CDBCCD	HYD SOLENOID SELECTOR VALVE	.00000	.00002	.00002	.00002	.00002	.00002	.00002	.00006	.00000	.00018	
14814	ABBCB L	PIN PULL SELECTOR VALVE	.00006	.00009	.00006	.00006	.00006	.00006	.00006	.00009	.00006	.00060	122
14520			.00006	.00008	.00006	.00006	.00006	.00006	.00006	.00010	.00006	.00060	123
14520	CDBAB L	LE CENTER LEFT FLAP	.00003	.00004	.00003	.00003	.00003	.00003	.00003	.00005	.00003	.00030	
14520	CDBAB R	LE CENTER RIGHT FLAP	.00003	.00004	.00003	.00003	.00003	.00003	.00003	.00005	.00003	.00030	
14624	CEFA	MANUAL RETRACT SWITCH	.00000	.00000	.00000	.00000	.00008	.00008	.00016	.00027	.00000	.00059	124
14811			.00006	.00008	.00006	.00006	.00006	.00006	.00006	.00008	.00004	.00058	125
14811	ABBAA R	WINGFOLD PIN PULL CYLINDER	.00003	.00004	.00003	.00003	.00003	.00003	.00003	.00004	.00003	.00029	
14811	ABBAB L	WINGFOLD PIN PULL CYLINDER	.00003	.00004	.00003	.00003	.00003	.00003	.00003	.00004	.00003	.00029	
23AA1			.00002	.00006	.00010	.00010	.00010	.00010	.00005	.00002	.00002	.00057	126
23AA1	BAEBA L		.00001	.00003	.00007	.00007	.00007	.00007	.00004	.00001	.00001	.00038	
23AA1	BAEBA R	IGNITION EXCITER UNIT	.00001	.00003	.00003	.00003	.00003	.00003	.00001	.00001	.00001	.00019	
4721F			.00000	.00000	.00010	.00012	.00012	.00012	.00010	.00000	.00000	.00056	127
4721F	EDAAL	PRIMARY AMPLIFIER	.00000	.00000	.00000	.00001	.00001	.00001	.00000	.00000	.00000	.00003	
4721F	EDABL	PRIMARY AMPLIFIER	.00000	.00000	.00000	.00001	.00001	.00001	.00000	.00000	.00000	.00003	
4721F	HDADA	QUANTITY AMPLIFIER	.00000	.00000	.00010	.00010	.00010	.00010	.00010	.00000	.00000	.00050	
1111420	JAJC L	SIDE PANELS	.00006	.00006	.00006	.00006	.00006	.00006	.00006	.00006	.00006	.00054	128
45115	KCBB	ACCUMULATOR	.00000	.00009	.00007	.00007	.00007	.00007	.00007	.00009	.00000	.00053	129
41548	CDAAAJR	TE POSITION SWITCH	.00000	.00018	.00000	.00000	.00000	.00000	.00016	.00018	.00000	.00052	130
41533			.00000	.00018	.00000	.00000	.00000	.00000	.00016	.00018	.00000	.00052	131
41533	CDAABCL	LE CUTOFF VALVE	.00000	.00009	.00000	.00000	.00000	.00000	.00008	.00009	.00000	.00026	
41533	CDAABCR	LE CUTOFF VALVE	.00000	.00009	.00000	.00000	.00000	.00000	.00008	.00009	.00000	.00026	
45113	KCDA	RESERVOIR	.00000	.00008	.00007	.00007	.00007	.00007	.00007	.00008	.00000	.00091	132
14210	CCAA R	RIGHT AILERON ASSY	.00000	.00010	.00006	.00006	.00006	.00006	.00006	.00010	.00000	.00050	133
12314	JAHCJ	SHUTTLE VALVE	.00000	.00002	.00008	.00010	.00010	.00010	.00008	.00002	.00000	.00090	134
42152			.00000	.00001	.00004	.00012	.00012	.00012	.00005	.00001	.00000	.00047	135
42152	EAADE	NO 2 CKT BREAKER PANEL	.00000	.00001	.00004	.00012	.00012	.00012	.00005	.00001	.00000	.00047	
42152	EEEA	NO 2 CKBR PANEL	.00000	.00000	.00000	.00000	.00000	.00000	.00000	.00000	.00000	.00000	
42152	GACAEF	NO 2 CIRCUIT BREAKER PANEL	.00000	.00000	.00000	.00000	.00000	.00000	.00000	.00000	.00000	.00000	
41551	CDAEA	MALFUNCTION LIGHT	.00005	.00005	.00005	.00005	.00005	.00005	.00005	.00005	.00005	.00045	136
13425	AABDB	ACCUMULATOR	.00005	.00005	.00005	.00005	.00005	.00005	.00005	.00005	.00005	.00045	137
41542			.00000	.00014	.00000	.00000	.00000	.00000	.00014	.00014	.00000	.00042	138
41542	CDAAABL		.00000	.00007	.00000	.00000	.00000	.00000	.00007	.00007	.00000	.00021	

CRITICALITY ORDERED BY CRITICALITY (PAGE 7 OF 12)

WUC	ALPHA		WUC-TITLE	CRITICALITIES BY FLIGHT PHASE PH1	PH2	PH3	PH4	PH5	PH6	PH7	PH8	PH9	TOTAL CRIT	CRIT RANK
41542	CDAAAHR		SHUTOFF VALVE	.00000	.00007	.00000	.00000	.00000	.00000	.00007	.00007	.00000	.00021	
23A78				.00004	.00008	.00004	.00004	.00004	.00004	.00004	.00004	.00004	.00040	139
23A78	BAQBA	L	A/R FUEL CONTROL	.00002	.00004	.00002	.00002	.00002	.00002	.00002	.00002	.00002	.00020	
23A78	BAQBA	R	A/R FUEL CONTROL	.00002	.00004	.00002	.00002	.00002	.00002	.00002	.00002	.00002	.00020	
46215				.00002	.00013	.00004	.00004	.00004	.00004	.00004	.00003	.00002	.00040	140
46215	BBJH	L	L DROP TANK PRESS REGULATOR	.00002	.00013	.00004	.00004	.00004	.00004	.00004	.00003	.00002	.00040	
46215	BBJH	R	R DROP TANK PRESS REGULATOR	.00000	.00000	.00000	.00000	.00000	.00000	.00000	.00000	.00000	.00000	
41120	EAAGC		CABIN HEAT EXCHANGER	.00000	.00001	.00002	.00011	.00011	.00011	.00002	.00001	.00000	.00039	141
4111R				.00000	.00001	.00003	.00010	.00010	.00010	.00004	.00001	.00000	.00039	142
4111R	EAABF		CABIN MANUAL TEMP SENSOR	.00000	.00001	.00001	.00003	.00003	.00003	.00001	.00001	.00000	.00013	
4111R	EAADB		CABIN MANUAL TEMP LIMITER	.00000	.00000	.00002	.00007	.00007	.00007	.00003	.00000	.00000	.00026	
41128	EAAGA		CABIN AIR OUTLET DUCT	.00000	.00001	.00002	.00011	.00011	.00011	.00002	.00001	.00000	.00039	143
23A67				.00004	.00006	.00004	.00004	.00004	.00004	.00004	.00004	.00004	.00038	144
23A67	BADDC	L		.00002	.00003	.00002	.00002	.00002	.00002	.00002	.00002	.00002	.00019	
23A67	BADDC	R	FUEL TUBING	.00002	.00003	.00002	.00002	.00002	.00002	.00002	.00002	.00002	.00019	
14324	CACL		LONG BELLOWS BELL	.00000	.00006	.00005	.00005	.00005	.00006	.00005	.00007	.00000	.00038	145
14557				.00004	.00004	.00004	.00004	.00004	.00004	.00004	.00006	.00004	.00038	146
14557	CDBBBAL		ACTUATING CYLINDER	.00002	.00002	.00002	.00002	.00002	.00002	.00002	.00003	.00002	.00019	
14557	CDBBBAR		RIGHT CENTER ACTUATING CYL	.00002	.00002	.00002	.00002	.00002	.00002	.00002	.00003	.00002	.00019	
51412				.00000	.00016	.00004	.00004	.00004	.00004	.00004	.00002	.00000	.00038	147
51412	HAABA	L	TACHOMETER GENERATOR	.00000	.00008	.00002	.00002	.00002	.00002	.00002	.00001	.00000	.00019	
51412	HAABA	R	TACHOMETER GENERATOR	.00000	.00008	.00002	.00002	.00002	.00002	.00002	.00001	.00000	.00019	
5711F	CFJ		AUTOPILOT COUPLER	.00000	.00027	.00002	.00002	.00002	.00002	.00002	.00004	.00000	.00036	148
14815				.00004	.00004	.00004	.00004	.00004	.00004	.00004	.00004	.00004	.00036	149
14815	ABBCC	R	WINGFOLD SELECTOR VALVE	.00002	.00002	.00002	.00002	.00002	.00002	.00002	.00002	.00002	.00018	
14815	ABBCD	L	WINGFOLD SELECTOR VALVE	.00002	.00002	.00002	.00002	.00002	.00002	.00002	.00002	.00002	.00018	
2344490				.00004	.00004	.00004	.00004	.00004	.00004	.00004	.00004	.00004	.00036	150
2344490	BABBH	L		.00002	.00002	.00002	.00002	.00002	.00002	.00002	.00002	.00002	.00018	
2344490	BABBH	R	CAM LINK ACTUATOR	.00002	.00002	.00002	.00002	.00002	.00002	.00002	.00002	.00002	.00018	
2344471				.00004	.00004	.00004	.00004	.00004	.00004	.00004	.00004	.00004	.00036	151
2344471	BABBC	L		.00002	.00002	.00002	.00002	.00002	.00002	.00002	.00002	.00002	.00018	
2344471	BABBC	R	SHROUD FLAP	.00002	.00002	.00002	.00002	.00002	.00002	.00002	.00002	.00002	.00018	
2344482				.00004	.00004	.00004	.00004	.00004	.00004	.00004	.00004	.00004	.00036	152
2344482	BABBG	L	NOZZLE FLAP HINGE	.00002	.00002	.00002	.00002	.00002	.00002	.00002	.00002	.00002	.00018	
2344482	BABBG	R	NOZZLE FLAP HINGE	.00002	.00002	.00002	.00002	.00002	.00002	.00002	.00002	.00002	.00018	
41547				.00000	.00012	.00000	.00000	.00000	.00000	.00012	.00012	.00000	.00036	153
41547	CDAAAEL		HUTOFF VALVE SWITCH	.00000	.00006	.00000	.00000	.00000	.00000	.00006	.00006	.00000	.00018	
41547	CDAAAER		SHUTOFF VALVE SWITCH	.00000	.00006	.00000	.00000	.00000	.00000	.00006	.00006	.00000	.00018	
11311	BDAA		FORWARD RAMP	.00000	.00013	.00004	.00005	.00005	.00005	.00002	.00002	.00000	.00036	154
1111410	JAJB	R		.00004	.00004	.00004	.00004	.00004	.00004	.00004	.00004	.00004	.00036	155
4111J				.00000	.00001	.00003	.00009	.00009	.00009	.00003	.00001	.00000	.00035	156
4111J	EAABA		TEMPERATURE CONTROL PANEL	.00000	.00001	.00001	.00003	.00003	.00003	.00001	.00001	.00000	.00013	
4111J	EAADA		TEMPERATURE CONTROL PANEL	.00000	.00000	.00002	.00006	.00006	.00006	.00002	.00000	.00000	.00022	
47215				.00000	.00000	.00004	.00009	.00009	.00009	.00004	.00000	.00000	.00035	157
47215	EDAAE		LOX FLEXIBLE HOSE	.00000	.00000	.00004	.00009	.00009	.00009	.00004	.00000	.00000	.00035	
47215	EDABE		LOX FLEXIBLE HOSE	.00000	.00000	.00000	.00000	.00000	.00000	.00000	.00000	.00000	.00000	
42125	KATB	R	R STATIC EXCITER REGULATOR	.00000	.00008	.00002	.00005	.00005	.00005	.00005	.00004	.00000	.00034	158
12312	JAHCB			.00000	.00002	.00006	.00006	.00006	.00006	.00006	.00002	.00000	.00034	159
12313	JAHCC		RELIEF VALVE	.00000	.00002	.00004	.00006	.00006	.00006	.00006	.00002	.00000	.00032	160

WUC	ALPHA	WUC-TITLE	CRITICALITIES BY FLIGHT PHASE PH1	PH2	PH3	PH4	PH5	PH6	PH7	PH8	PH9	TOTAL CRIT	CRIT RANK
123A4	JAHABC	CABLE MECHANISM	.00000	.00002	.00004	.00006	.00006	.00006	.00006	.00002	.00000	.00032	161
12318	JAHCH	PRESSURE OPERATING VALVE	.00000	.00002	.00004	.00006	.00006	.00006	.00006	.00002	.00000	.00032	162
47112	EDCB	LOX CONTAINER	.00000	.00000	.00004	.00008	.00008	.00008	.00004	.00000	.00000	.00032	163
1455W	CDBCAC	DUMP VALVE OVERBOARD DRAIN	.00001	.00007	.00003	.00003	.00003	.00003	.00003	.00007	.00001	.00031	164
41411	EFBB	AFT ANTI-G VALVE	.00000	.00000	.00006	.00006	.00006	.00006	.00006	.00000	.00000	.00030	165
46231	BBHN	CL DROP TANK	.00000	.00000	.00015	.00015	.00000	.00000	.00000	.00000	.00000	.00030	166
51843	HADCA	FUEL QUANTITY SIMULATOR	.00006	.00000	.00000	.00002	.00004	.00006	.00006	.00006	.00000	.00030	167
51637			.00000	.00004	.00004	.00004	.00004	.00004	.00004	.00004	.00000	.00028	168
51637	BABAB L	NOZZLE POSITION INDICATOR	.00000	.00002	.00002	.00002	.00002	.00002	.00002	.00002	.00000	.00014	
51637	BABAB R	NOZZLE POSITION INDICATOR	.00000	.00002	.00002	.00002	.00002	.00002	.00002	.00002	.00000	.00014	
51811	KCCC	PRESSURE INDICATOR	.00000	.00004	.00004	.00004	.00004	.00004	.00004	.00004	.00000	.00028	169
4721R			.00000	.00000	.00004	.00006	.00006	.00006	.00004	.00000	.00000	.00026	170
4721R	EDAAS	INTERMEDIATE BLOCK	.00000	.00000	.00002	.00003	.00003	.00003	.00002	.00000	.00000	.00013	
4721R	EDABS	INTERMEDIATE BLOCK	.00000	.00000	.00002	.00003	.00003	.00003	.00002	.00000	.00000	.00013	
14556			.00002	.00004	.00002	.00002	.00002	.00002	.00004	.00006	.00002	.00026	171
14556	CDBBCAL	ACTUATING CYLINDER	.00001	.00002	.00001	.00001	.00001	.00001	.00002	.00003	.00001	.00013	
14556	CDBBCAR	RIGHT INBOARD ACTUATING CYL	.00001	.00002	.00001	.00001	.00001	.00001	.00002	.00003	.00001	.00013	
41112			.00000	.00002	.00002	.00006	.00006	.00006	.00002	.00002	.00000	.00026	172
41112	EABB	FOOT HEAT-DEFOG CONTROL LVR	.00000	.00002	.00002	.00004	.00004	.00004	.00002	.00002	.00000	.00020	
41112	EACB	FOOT HEAT-DEFOG CONTROL LVR	.00000	.00000	.00000	.00002	.00002	.00002	.00000	.00000	.00000	.00006	
14428			.00000	.00011	.00001	.00001	.00001	.00001	.00001	.00009	.00000	.00025	173
14428	ABAGB R	RUDDER PEDAL	.00000	.00003	.00000	.00000	.00000	.00000	.00000	.00002	.00000	.00005	
14428	ABAGC L	RUDDER PEDAL	.00000	.00003	.00000	.00000	.00000	.00000	.00000	.00002	.00000	.00005	
14428	CHGA	RUDDER PEDALS	.00000	.00005	.00001	.00001	.00001	.00001	.00001	.00005	.00000	.00015	
46431	BBNQ	FUEL LOW LEVEL SWITCH	.00000	.00008	.00002	.00003	.00002	.00004	.00004	.00002	.00000	.00025	174
51628	CDBJA	POSITION TRANSMITTER	.00000	.00009	.00000	.00000	.00000	.00000	.00005	.00009	.00000	.00023	175
14262			.00000	.00012	.00000	.00000	.00000	.00000	.00000	.00010	.00000	.00022	176
14262	CCFA L	CARTRIDGE JACK ACTUATOR	.00000	.00006	.00000	.00000	.00000	.00000	.00000	.00005	.00000	.00011	
14262	CCFA R	CARTRIDGE JACK ACTUATOR	.00000	.00006	.00000	.00000	.00000	.00000	.00000	.00005	.00000	.00011	
41541			.00000	.00008	.00000	.00000	.00000	.00000	.00006	.00008	.00000	.00022	177
41541	CDAAAAL	DUCT	.00000	.00004	.00000	.00000	.00000	.00000	.00003	.00004	.00000	.00011	
41541	CDAAAAR	DUCT	.00000	.00004	.00000	.00000	.00000	.00000	.00003	.00004	.00000	.00011	
41538			.00000	.00008	.00000	.00000	.00000	.00000	.00006	.00008	.00000	.00022	178
41538	CDAABHL	SHUTOFF VALVE LINK	.00000	.00004	.00000	.00000	.00000	.00000	.00003	.00004	.00000	.00011	
41538	CDAABHR	SHUTOFF VALVE LINK	.00000	.00004	.00000	.00000	.00000	.00000	.00003	.00004	.00000	.00011	
41537			.00000	.00008	.00000	.00000	.00000	.00000	.00006	.00008	.00000	.00022	179
41537	CDAABGL	SHUTOFF VALVE SWITCH	.00000	.00004	.00000	.00000	.00000	.00000	.00003	.00004	.00000	.00011	
41537	CDAABGR	SHUTOFF VALVE SWITCH	.00000	.00004	.00000	.00000	.00000	.00000	.00003	.00004	.00000	.00011	
29A1G			.00000	.00020	.00000	.00000	.00000	.00000	.00000	.00000	.00000	.00020	180
29A1G	BFCA L	CONTROLLER	.00000	.00010	.00000	.00000	.00000	.00000	.00000	.00000	.00000	.00010	
29A1G	BFCA R	CONTROLLER	.00000	.00010	.00000	.00000	.00000	.00000	.00000	.00000	.00000	.00010	
46167	BBCG	TANK NO 7	.00000	.00008	.00001	.00001	.00001	.00004	.00004	.00001	.00000	.00020	181
13343	ABAFA	CONTROL UNIT	.00001	.00009	.00000	.00000	.00000	.00000	.00000	.00008	.00001	.00019	182
23AB100	FAJC L	ANTI-ICE VALVE	.00002	.00002	.00002	.00002	.00002	.00002	.00002	.00002	.00002	.00018	183
14812			.00002	.00002	.00002	.00002	.00002	.00002	.00002	.00002	.00002	.00018	184
14812	ABBBA R	WINGFOLD ACTUATOR CYLINDER	.00001	.00001	.00001	.00001	.00001	.00001	.00001	.00001	.00001	.00009	
14812	ABABB L	WINGFOLD ACTUATOR CYLINDER	.00001	.00001	.00001	.00001	.00001	.00001	.00001	.00001	.00001	.00009	
14321	CACM	FEEL SYSTEM BALANCE	.00000	.00003	.00002	.00002	.00002	.00002	.00002	.00003	.00000	.00016	185
14337	FACA		.00000	.00003	.00002	.00002	.00002	.00002	.00002	.00003	.00000	.00016	186

CRITICALITY ORDERED BY CRITICALITY (PAGE 9 OF 12)

WUC	ALPHA	WUC-TITLE	CRITICALITIES BY FLIGHT PHASE PH1	PH2	PH3	PH4	PH5	PH6	PH7	PH8	PH9	TOTAL CRIT	CRIT RANK
4532700	KHFA	RAM AIR TURBINE	.00000	.00002	.00000	.00004	.00004	.00004	.00000	.00002	.00000	.00016	187
45321	KHFC	PNEUMATIC SEQUENCE VALVE	.00000	.00002	.00000	.00004	.00004	.00004	.00000	.00002	.00000	.00016	188
51824			.00000	.00006	.00001	.00001	.00001	.00001	.00001	.00005	.00000	.00016	189
51824	CBGC	RUDDER TRIM TRANSMITTER	.00000	.00005	.00001	.00001	.00001	.00001	.00001	.00005	.00000	.00015	
51824	CBHA	RUDDER POSITION TRANSMITTER	.00000	.00001	.00000	.00000	.00000	.00000	.00000	.00000	.00000	.00001	
47216			.00000	.00000	.00002	.00004	.00004	.00004	.00002	.00000	.00000	.00016	190
47216	EDAAF	LOWER DISCONNECT BLOCK	.00000	.00000	.00002	.00004	.00004	.00004	.00002	.00000	.00000	.00016	
47216	EDAAF	LOWER DISCONNECT BLOCK	.00000	.00000	.00000	.00000	.00000	.00000	.00000	.00000	.00000	.00000	
12311	JAHCA		.00000	.00000	.00002	.00004	.00004	.00004	.00002	.00000	.00000	.00016	191
14435	CBGA	TRIM SWITCH	.00000	.00005	.00001	.00001	.00001	.00001	.00001	.00005	.00000	.00015	192
41123	EAAFA	TURBINE OVERSPEED SWITCH	.00000	.00000	.00000	.00005	.00005	.00005	.00000	.00000	.00000	.00015	193
41120	EAAGC	CABIN HEAT EXCHANGER	.00000	.00002	.00002	.00002	.00002	.00002	.00002	.00002	.00000	.00014	194
23AA5			.00000	.00000	.00003	.00003	.00003	.00003	.00002	.00000	.00000	.00014	195
23AA5	BAEAB L	HIGH TENSION LEAD	.00000	.00000	.00003	.00003	.00003	.00003	.00002	.00000	.00000	.00014	
23AA5	BAEAB R	HIGH TENSION LEAD	.00000	.00000	.00000	.00000	.00000	.00000	.00000	.00000	.00000	.00000	
29A1H			.00000	.00014	.00000	.00000	.00000	.00000	.00000	.00000	.00000	.00014	196
29A1H	BFCD L	PITOT TUBE	.00000	.00007	.00000	.00000	.00000	.00000	.00000	.00000	.00000	.00007	
29A1H	BFCD R	PITOT TUBE	.00000	.00007	.00000	.00000	.00000	.00000	.00000	.00000	.00000	.00007	
29A1H	FAAA		.00000	.00000	.00000	.00000	.00000	.00000	.00000	.00000	.00000	.00000	
51815	KECF	PRESSURE GAGE	.00000	.00002	.00002	.00002	.00002	.00002	.00002	.00002	.00000	.00014	197
46314	BBPD	PROBE DOOR ACTUATOR	.00000	.00000	.00000	.00002	.00002	.00004	.00004	.00002	.00000	.00014	198
4111B	EAABG	TEMP CONTROL RHEOSTAT	.00000	.00001	.00001	.00003	.00003	.00003	.00001	.00001	.00000	.00013	199
13341	AGAHA	POWER UNIT COMPENSATOR	.00001	.00004	.00000	.00000	.00000	.00000	.00000	.00005	.00001	.00013	200
14119	CCGB L	LINKAGE	.00000	.00004	.00001	.00001	.00001	.00001	.00001	.00003	.00000	.00012	201
14818	ABBEF	MANUAL LOCKPIN HANDLE	.00000	.00004	.00001	.00001	.00000	.00001	.00001	.00004	.00000	.00012	202
14623			.00000	.00000	.00000	.00000	.00002	.00002	.00004	.00004	.00000	.00012	203
14623	CEAC L	SPEED BRAKE CYLINDER	.00000	.00000	.00000	.00000	.00001	.00001	.00002	.00002	.00000	.00006	
14623	CEAC R	SPEED BRAKE CYLINDER	.00000	.00000	.00000	.00000	.00001	.00001	.00002	.00002	.00000	.00006	
14621	CECA	SPEED BRAKE SELECTOR VALVE	.00000	.00000	.00000	.00000	.00002	.00002	.00004	.00004	.00000	.00012	204
41548			.00000	.00004	.00000	.00000	.00000	.00000	.00004	.00004	.00000	.00012	205
41548	CDAAAGL		.00000	.00002	.00000	.00000	.00000	.00000	.00002	.00002	.00000	.00006	
41548	CDAAAGR	SEAL	.00000	.00002	.00000	.00000	.00000	.00000	.00002	.00002	.00000	.00006	
41521			.00000	.00004	.00000	.00000	.00000	.00000	.00004	.00004	.00000	.00012	206
41521	CDAACAL	W/F BLC BELLOWS	.00000	.00002	.00000	.00000	.00000	.00000	.00002	.00002	.00000	.00006	
41521	CDAACAR	W/F BLC BELLOWS	.00000	.00002	.00000	.00000	.00000	.00000	.00002	.00002	.00000	.00006	
46233	BBHP R	R DROP TANK	.00000	.00000	.00006	.00006	.00000	.00000	.00000	.00000	.00000	.00012	207
14551			.00000	.00004	.00000	.00000	.00000	.00000	.00001	.00006	.00000	.00011	208
1442E	CBFE	RUDDER AIR SPEED SWITCH	.00000	.00005	.00000	.00000	.00000	.00000	.00000	.00005	.00000	.00010	209
4111L			.00000	.00000	.00002	.00002	.00002	.00002	.00002	.00000	.00000	.00010	210
4111L	EAEC	AFT PRESS SUT ARFL SHTOF VL	.00000	.00000	.00001	.00001	.00001	.00001	.00001	.00000	.00000	.00005	
4111L	EAFC	FWD PRES SUT ARFL SHTOF VLV	.00000	.00000	.00001	.00001	.00001	.00001	.00001	.00000	.00000	.00005	
41238	EHD	CHECK VALVE	.00000	.00000	.00001	.00002	.00002	.00002	.00002	.00001	.00000	.00010	211
4721C			.00000	.00000	.00002	.00002	.00002	.00002	.00002	.00000	.00000	.00010	212
4721C	EDAAJ	COMPOSITE DISCONNECT	.00000	.00000	.00001	.00001	.00001	.00001	.00001	.00000	.00000	.00005	
4721C	EDABJ	COMPOSITE DISCONNECT	.00000	.00000	.00001	.00001	.00001	.00001	.00001	.00000	.00000	.00005	
46135	BBBG	MANIFOLD DRAIN VALVE	.00000	.00002	.00000	.00000	.00000	.00002	.00004	.00002	.00000	.00010	213
51842			.00002	.00000	.00000	.00000	.00001	.00002	.00002	.00002	.00000	.00009	214
51842	HADDA	TANK NO 7 FUEL PROBE	.00000	.00000	.00000	.00000	.00000	.00000	.00000	.00000	.00000	.00000	
51842	HADDB	TANK NO 6 FUEL PROBE	.00000	.00000	.00000	.00000	.00000	.00000	.00000	.00000	.00000	.00000	

WUC	ALPHA	WUC-TITLE	CRITICALITIES BY FLIGHT PHASE PH1	PH2	PH3	PH4	PH5	PH6	PH7	PH8	PH9	TOTAL CRIT	CRIT RANK
51842	HADDC	TANK NO 6 FUEL PROBE	.00000	.00000	.00000	.00000	.00000	.00000	.00000	.00000	.00000	.00000	
51842	HADDD	TANK NO 4 FUEL PROBE	.00000	.00000	.00000	.00000	.00000	.00000	.00000	.00000	.00000	.00000	
51842	HADDE	TANK NO 3 FUEL PROBE	.00000	.00000	.00000	.00000	.00000	.00000	.00000	.00000	.00000	.00000	
51842	HADDF	TANK NO 2 FUEL PROBE	.00000	.00000	.00000	.00000	.00000	.00000	.00000	.00000	.00000	.00000	
51842	HADDG	TANK NO 1 UPPER FUEL PROBE	.00002	.00000	.00000	.00000	.00001	.00002	.00002	.00002	.00000	.00009	
51842	HADEA	R O/B FUEL PROBE	.00000	.00000	.00000	.00000	.00000	.00000	.00000	.00000	.00000	.00000	
51842	HADEB	R INT FUEL PROBE	.00000	.00000	.00000	.00000	.00000	.00000	.00000	.00000	.00000	.00000	
51842	HADEC	R I/B FUEL PROBE	.00000	.00000	.00000	.00000	.00000	.00000	.00000	.00000	.00000	.00000	
51842	HADED	L O/B FUEL PROBE	.00000	.00000	.00000	.00000	.00000	.00000	.00000	.00000	.00000	.00000	
51842	HADEE	L INT FUEL PROBE	.00000	.00000	.00000	.00000	.00000	.00000	.00000	.00000	.00000	.00000	
51621			.00000	.00006	.00001	.00000	.00000	.00000	.00000	.00002	.00000	.00009	215
51621	CCJB L		.00000	.00003	.00000	.00000	.00000	.00000	.00000	.00001	.00000	.00004	
51621	CCJB R	AILERON POSITION INDICATOR	.00000	.00003	.00001	.00000	.00000	.00000	.00000	.00001	.00000	.00005	
14590			.00000	.00003	.00000	.00000	.00000	.00000	.00001	.00005	.00000	.00009	216
14221			.00000	.00004	.00000	.00000	.00000	.00000	.00000	.00004	.00000	.00008	217
14221	CCDA L	DAMPER CYLINDER ASSY	.00000	.00002	.00000	.00000	.00000	.00000	.00000	.00002	.00000	.00004	
14221	CCDA R	DAMPER CYLINDER ASSY	.00000	.00002	.00000	.00000	.00000	.00000	.00000	.00002	.00000	.00004	
41211	EAAAA	PNEUMATIC DUMP VALVE	.00000	.00000	.00001	.00002	.00002	.00002	.00001	.00000	.00000	.00008	218
45218	KGBB	CHEMICAL DRIER	.00000	.00000	.00000	.00000	.00000	.00000	.00000	.00008	.00000	.00008	219
51118			.00000	.00000	.00000	.00002	.00002	.00002	.00002	.00000	.00000	.00008	220
51118	EAAAB	FWD CKPT CABIN PRESS IND	.00000	.00000	.00000	.00001	.00001	.00001	.00001	.00000	.00000	.00004	
51118	EAAAH	AFT CKPT CABIN PRESS IND	.00000	.00000	.00000	.00001	.00001	.00001	.00001	.00000	.00000	.00004	
51823	KGFD	PRESSURE TRANSMITTER	.00000	.00001	.00001	.00001	.00001	.00001	.00001	.00001	.00000	.00007	221
51814	KECE	PRESSURE TRANSMITTER	.00000	.00001	.00001	.00001	.00001	.00001	.00001	.00001	.00000	.00007	222
51822	KGFC	PRESSURE INDICATOR	.00000	.00001	.00001	.00001	.00001	.00001	.00001	.00001	.00000	.00007	223
51812	KCCB	PRESSURE TRANSMITTER	.00000	.00001	.00001	.00001	.00001	.00001	.00001	.00001	.00000	.00007	224
51814	KDCB	PRESSURE TRANSMITTER	.00000	.00001	.00001	.00001	.00001	.00001	.00001	.00001	.00000	.00007	225
51813	KDCC	PRESSURE INDICATOR	.00000	.00001	.00001	.00001	.00001	.00001	.00001	.00001	.00000	.00007	226
45118	KCDC	HYD/FUEL RADIATOR	.00000	.00001	.00001	.00001	.00001	.00001	.00001	.00001	.00000	.00007	227
45117	KFAA	PC 1 PRESSURE SWITCH	.00000	.00001	.00001	.00001	.00001	.00001	.00001	.00001	.00000	.00007	228
44228			.00000	.00000	.00000	.00001	.00001	.00002	.00002	.00001	.00000	.00007	229
44228	BBPL	NIGHT REFUELING LIGHT	.00000	.00000	.00000	.00001	.00001	.00002	.00002	.00001	.00000	.00007	
44228	FBBA	IFR PROBE LIGHT	.00000	.00000	.00000	.00000	.00000	.00000	.00000	.00000	.00000	.00000	
14313	CAAD	ALUM TE HONEYCOMB	.00000	.00001	.00001	.00001	.00001	.00001	.00001	.00001	.00000	.00007	230
14312	CAAC	STEEL TE HONEYCOMB	.00000	.00001	.00001	.00001	.00001	.00001	.00001	.00001	.00000	.00007	231
14311	CAAB	COVER ASSEMBLY	.00000	.00001	.00001	.00001	.00001	.00001	.00001	.00001	.00000	.00007	232
14432	CBFB	RUDDER FEEL CYLINDER	.00000	.00004	.00000	.00000	.00000	.00000	.00000	.00003	.00000	.00007	233
41118	EADA	WINDSHIELD CNT PNL DEFG NOZ	.00000	.00001	.00001	.00001	.00001	.00001	.00001	.00001	.00000	.00007	234
23462			.00000	.00007	.00000	.00000	.00000	.00000	.00000	.00000	.00000	.00007	235
29411			.00000	.00006	.00000	.00000	.00000	.00000	.00000	.00000	.00000	.00006	236
29411	BFAA L	BELLMOUTH RING	.00000	.00003	.00000	.00000	.00000	.00000	.00000	.00000	.00000	.00003	
29411	BFAA R	BELLMOUTH RING	.00000	.00003	.00000	.00000	.00000	.00000	.00000	.00000	.00000	.00003	
41124	EAACE	PRESS SUIT TEMP MIXING VALV	.00000	.00000	.00000	.00002	.00002	.00002	.00000	.00000	.00000	.00006	237
41531			.00000	.00002	.00000	.00000	.00000	.00000	.00002	.00002	.00000	.00006	238
41531	CDAABAL	BELLOWS ASSY	.00000	.00001	.00000	.00000	.00000	.00000	.00001	.00001	.00000	.00003	
41531	CDAABAR	BELLOWS ASSY	.00000	.00001	.00000	.00000	.00000	.00000	.00001	.00001	.00000	.00003	
4614E	BBCP	TANK NO 6 ELECT FUEL PUMP	.00000	.00006	.00000	.00000	.00000	.00000	.00000	.00000	.00000	.00006	239
1334L	ABAGA	NOSE WHEEL STEERING SWITCH	.00000	.00003	.00000	.00000	.00000	.00000	.00000	.00003	.00000	.00006	240
1334A	ABADA	SELECTOR VALVE	.00000	.00002	.00000	.00000	.00000	.00000	.00000	.00002	.00000	.00004	241

FUC	ALPHA	FUC-TITLE	CRITICALITIES BY FLIGHT PHASE PH1	PH2	PH3	PH4	PH5	PH6	PH7	PH8	PH9	TOTAL CRIT	CRIT RANK
13145			.00000	.00002	.00000	.00000	.00000	.00000	.00000	.00002	.00000	.00004	242
13145	DAAAAQ		.00000	.00000	.00000	.00000	.00000	.00000	.00000	.00000	.00000	.00000	
13145	DAAAAQ'		.00000	.00000	.00000	.00000	.00000	.00000	.00000	.00000	.00000	.00000	
13145	DAAAAQR	R MAIN GEAR SCISSORS SWITCH	.00000	.00002	.00000	.00000	.00000	.00000	.00000	.00002	.00000	.00004	
13145	DAAAQ R	RMLG SCISSORS SWITCH	.00000	.00000	.00000	.00000	.00000	.00000	.00000	.00000	.00000	.00000	
13145	DABABQL		.00000	.00000	.00000	.00000	.00000	.00000	.00000	.00000	.00000	.00000	
13145	DABABQR	RMLG SCISSORS SWITCH	.00000	.00000	.00000	.00000	.00000	.00000	.00000	.00000	.00000	.00000	
13145	DABADQL	LMAIN GEAR SCISSORS SW	.00000	.00000	.00000	.00000	.00000	.00000	.00000	.00000	.00000	.00000	
45320	KHFJ	SWIVEL ASSEMBLY	.00000	.00002	.00000	.00000	.00000	.00000	.00000	.00002	.00000	.00004	243
46227	BBKA	CL TANK FUEL FLOW SWITCH	.00000	.00000	.00002	.00002	.00000	.00000	.00000	.00000	.00000	.00004	244
51623	CBWB	RUDDER POSITION INDICATOR	.00000	.00002	.00001	.00000	.00000	.00000	.00000	.00001	.00000	.00004	245
42141	KHFA	EMERGENCY GENERATOR	.00000	.00002	.00000	.00000	.00000	.00000	.00000	.00002	.00000	.00004	246
41134			.00000	.00004	.00000	.00000	.00000	.00000	.00000	.00000	.00000	.00004	247
41134	EBADC	BLEED AIR INLET DUCT	.00000	.00002	.00000	.00000	.00000	.00000	.00000	.00000	.00000	.00002	
41134	EBADD	BLEED AIR OUTLET DUCT	.00000	.00002	.00000	.00000	.00000	.00000	.00000	.00000	.00000	.00002	
41134	EBPCJ	DUCTING	.00000	.00000	.00000	.00000	.00000	.00000	.00000	.00000	.00000	.00000	
41215	EAAAG	CABIN PRESS SAFETY VALVE	.00000	.00000	.00000	.00001	.00001	.00001	.00001	.00000	.00000	.00004	248
29C11			.00000	.00000	.00000	.00000	.00000	.00000	.00000	.00004	.00000	.00004	249
29C11	BGBDB	ANGLE OF ATTACK TRANSMITTER	.00000	.00000	.00000	.00000	.00000	.00000	.00000	.00002	.00000	.00002	
29C11	BGBDC	STAB POSITION TRANSDUCER	.00000	.00000	.00000	.00000	.00000	.00000	.00000	.00002	.00000	.00002	
14269	CCFD L	ELECTRICAL CONTROL	.00000	.00002	.00000	.00000	.00000	.00000	.00000	.00002	.00000	.00004	250
14610			.00000	.00000	.00000	.00000	.00000	.00000	.00002	.00002	.00000	.00004	251
14610	CEAA L	SPEED BRAKE ASSEMBLY	.00000	.00000	.00000	.00000	.00000	.00000	.00001	.00001	.00000	.00002	
14610	CEAA R	SPEED BRAKE ASSEMBLY	.00000	.00000	.00000	.00000	.00000	.00000	.00001	.00001	.00000	.00002	
14600			.00000	.00001	.00000	.00000	.00000	.00000	.00000	.00002	.00000	.00003	252
14547			.00000	.00001	.00000	.00000	.00000	.00000	.00000	.00002	.00000	.00003	253
14543			.00000	.00001	.00000	.00000	.00000	.00000	.00000	.00002	.00000	.00003	254
13511	AACAB	VERTICAL DAMPER CYLINDER	.00000	.00002	.00000	.00000	.00000	.00000	.00000	.00001	.00000	.00003	255
14541			.00000	.00001	.00000	.00000	.00000	.00000	.00000	.00002	.00000	.00003	256
41117			.00000	.00000	.00000	.00001	.00001	.00001	.00000	.00000	.00000	.00003	257
41117	EAAJC	AIR DISTRIBUTION DUCT	.00000	.00000	.00000	.00001	.00001	.00001	.00000	.00000	.00000	.00003	
41117	EAAKB	DUCTING	.00000	.00000	.00000	.00000	.00000	.00000	.00000	.00000	.00000	.00000	
4111F	EAAAL	CABIN AIR INLET VALVE	.00000	.00000	.00000	.00001	.00001	.00001	.00000	.00000	.00000	.00003	258
41127	EAAGF	GROUND COOLING SHUTOFF VLV	.00000	.00000	.00000	.00001	.00001	.00001	.00000	.00000	.00000	.00003	259
47213			.00000	.00000	.00000	.00001	.00001	.00001	.00000	.00000	.00000	.00003	260
47213	EDAAC	LOW WARNING LIGHT	.00000	.00000	.00000	.00001	.00001	.00001	.00000	.00000	.00000	.00003	
47213	EDABC	LOW WARNING LIGHT	.00000	.00000	.00000	.00000	.00000	.00000	.00000	.00000	.00000	.00000	
47213	HDAFA	LOX LOW WARNING LIGHT	.00000	.00000	.00000	.00000	.00000	.00000	.00000	.00000	.00000	.00000	
46432	BBGG	FUEL LOW LEVEL SWITCH	.00000	.00003	.00000	.00000	.00000	.00000	.00000	.00000	.00000	.00003	261
46161	BBCA	TANK NO 1	.00000	.00003	.00000	.00000	.00000	.00000	.00000	.00000	.00000	.00003	262
46140	BBCM	TANK NO 4 ELECT FUEL PUMP	.00000	.00002	.00000	.00000	.00000	.00000	.00000	.00000	.00000	.00002	263
46212	BBJB	CL TANK PRESS/VENT VALVE	.00000	.00000	.00001	.00001	.00000	.00000	.00000	.00000	.00000	.00002	264
46121	BBHH	REFUELING SHUTOFF VALVE	.00000	.00000	.00001	.00001	.00000	.00000	.00000	.00000	.00000	.00002	265
4613105			.00000	.00002	.00000	.00000	.00000	.00000	.00000	.00000	.00000	.00002	266
4613100	BBBA	LH BOOST PUMP ASSEMBLY	.00000	.00001	.00000	.00000	.00000	.00000	.00000	.00000	.00000	.00001	
4613100	BBBB	RH BOOST PUMP ASSEMBLY	.00000	.00001	.00000	.00000	.00000	.00000	.00000	.00000	.00000	.00001	
46433	BBFA	WARNING LIGHT	.00000	.00000	.00000	.00000	.00000	.00001	.00001	.00000	.00000	.00002	267
46417			.00000	.00002	.00000	.00000	.00000	.00000	.00000	.00000	.00000	.00002	268
46417	BBNK	DROP TANKS SELECTOR SWITCH	.00000	.00001	.00000	.00000	.00000	.00000	.00000	.00000	.00000	.00001	

WUC	ALPHA	WUC-TITLE	CRITICALITIES BY FLIGHT PHASE PH1	PH2	PH3	PH4	PH5	PH6	PH7	PH8	PH9	TOTAL CRIT	CRIT RANK
46417	BBBA	REFUEL SELECTOR SWITCH	.00002	.00001	.00000	.00000	.00000	.00000	.00000	.00000	.00000	.00001	
51622			.00000	.00002	.00000	.00000	.00000	.00000	.00000	.00000	.00000	.00002	269
51622	CCJA	L WING POSITION TRANSMITTER	.00000	.00001	.00000	.00000	.00000	.00000	.00000	.00000	.00000	.00001	
51622	CCJA	R WING POSITION TRANSMITTER	.00000	.00001	.00000	.00000	.00000	.00000	.00000	.00000	.00000	.00001	
29C14	BGBAA	CONTROL AMPLIFIER	.00000	.00000	.00000	.00000	.00000	.00000	.00000	.00002	.00000	.00002	270
14500			.00000	.00001	.00000	.00000	.00000	.00000	.00000	.00001	.00000	.00002	271
14410	CBAA	RUDDER ASSEMBLY	.00000	.00001	.00000	.00000	.00000	.00000	.00000	.00001	.00000	.00002	272
14611			.00000	.00000	.00000	.00000	.00000	.00000	.00001	.00001	.00000	.00002	273
14611	CEAB	L HONEYCOMB SKIN	.00000	.00000	.00000	.00000	.00000	.00000	.00001	.00000	.00000	.00000	
14611	CEAB	R HONEYCOMB SKIN	.00000	.00000	.00000	.00000	.00000	.00000	.00000	.00000	.00000	.00000	
13142			.00000	.00002	.00000	.00000	.00000	.00000	.00000	.00000	.00000	.00002	274
13142	DAAAACL	LMLG DOWN LIMIT SWITCH	.00000	.00000	.00000	.00000	.00000	.00000	.00000	.00000	.00000	.00000	
13142	DAAAACR	R MAIN GEAR DWN LIMIT SW	.00000	.00002	.00000	.00000	.00000	.00000	.00000	.00000	.00000	.00002	
13142	DABABCL	LMLG DOWN LIMIT SWITCH	.00000	.00000	.00000	.00000	.00000	.00000	.00000	.00000	.00000	.00000	
13142	DABABCR	RMLG DOWN LIMIT SWITCH	.00000	.00000	.00000	.00000	.00000	.00000	.00000	.00000	.00000	.00000	
13346	ABACE	FILTER ASSY	.00000	.00001	.00000	.00000	.00000	.00000	.00000	.00001	.00000	.00002	275
14542			.00000	.00000	.00000	.00000	.00000	.00000	.00000	.00001	.00000	.00001	276
13515	AACAG	AIR-OIL MANIFOLD	.00000	.00001	.00000	.00000	.00000	.00000	.00000	.00000	.00000	.00001	277
29C17	BGBCA	WARNING LIGHT	.00000	.00000	.00000	.00000	.00000	.00000	.00000	.00001	.00000	.00001	278
51625	CAEA	POSITION TRANSMITTER	.00000	.00000	.00000	.00000	.00000	.00000	.00000	.00001	.00000	.00001	279
46122	BBBE	DEFUELING SHUTOFF VALVE	.00000	.00001	.00000	.00000	.00000	.00000	.00000	.00000	.00000	.00001	280
46164	BBCD	TANK NO 4	.00000	.00001	.00000	.00000	.00000	.00000	.00000	.00000	.00000	.00001	281
46162	BBCB	TANK NO 2	.00000	.00001	.00000	.00000	.00000	.00000	.00000	.00000	.00000	.00001	282

APPENDIX C

COMPUTER PROGRAMS AND LISTINGS

This appendix presents the computer program listings for the six programs required for construction and exercise of the F-4J flight safety model.

The first program, "Navy Top-Down Path Generator" illustrates the path-identification and safety-sensitivity computation. Under each diagram is indicated the corresponding steps in the program listing.

The second program, "Criticality-Calculations", computes the path criticalities, then combines them for each Work Unit Code and mission phase. Inputs to this program are the path sensitivities from the first program, and Navy 3M data.

The other four programs are presented as lists because of their simplicity. These programs are:

a. "Top-Down Printout Routine" which prints out the results of the first program.

b. "Top-Down Tape Gen" which accepts the functional cards and produces a Dictonary Tape showing WUC, alpha's, and name; and a Dependent Function Array Tape containing sensitivity values for each functional link.

c. "Top-Down Tape Sort" which sorts the Dependent Function Array Tape by dependent function for use in the Top-Down Path Generator Program.

d. "Sort + Merge Path and Failure Data" which merges the path sensitivity information with the failure data applicable to each WUC for use in the Criticality Calculations Program.

NAVY TOP-DOWN PATH GENERATOR

(Listing Items 136-161)

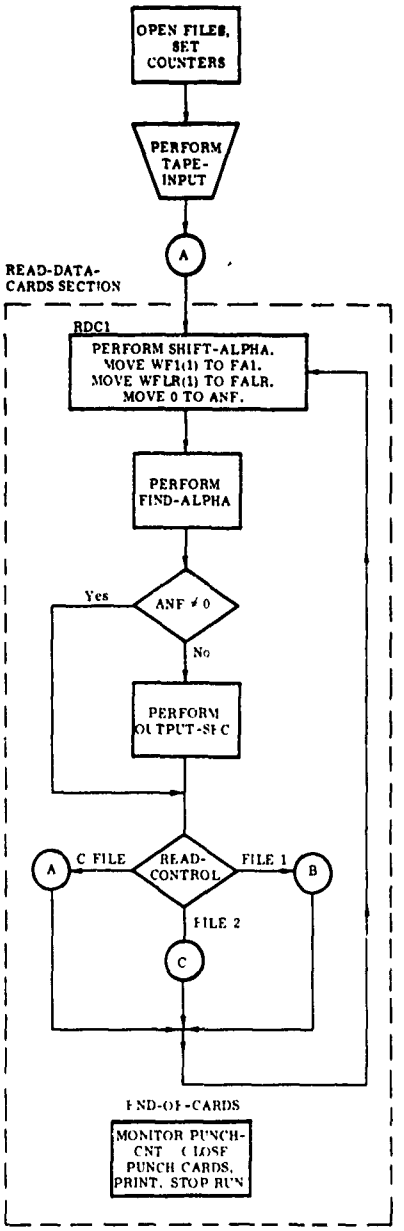

(Listing Items 168-180)

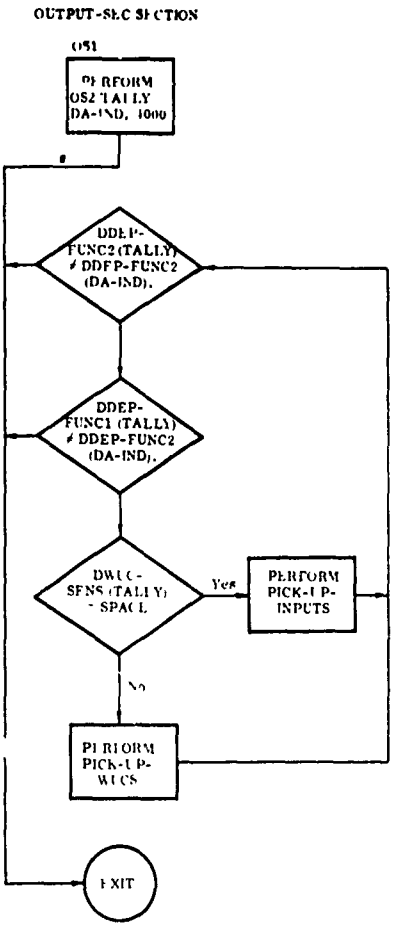

NAVY TOP-DOWN PATH GENERATOR

(Listing Items 236-282)

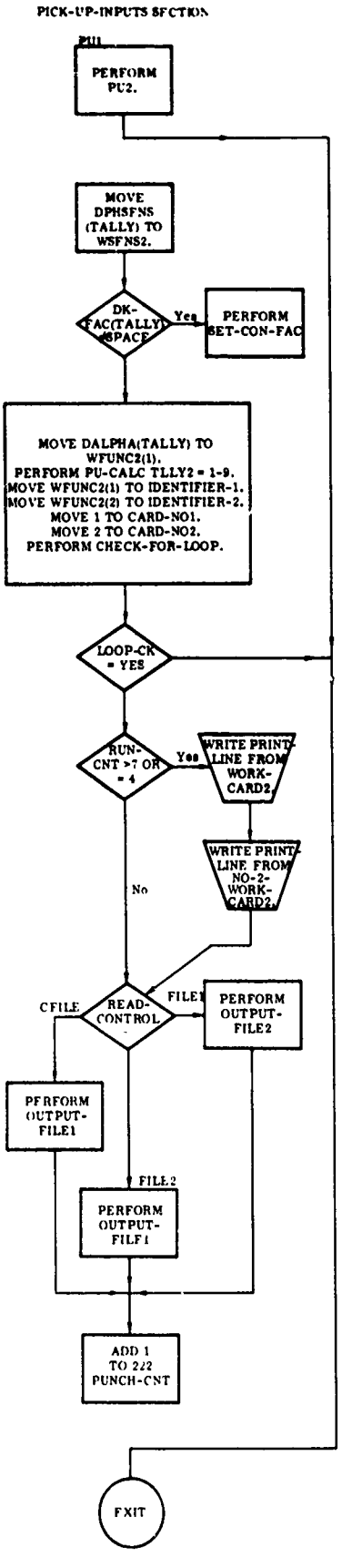

(Listing Items 289-316)

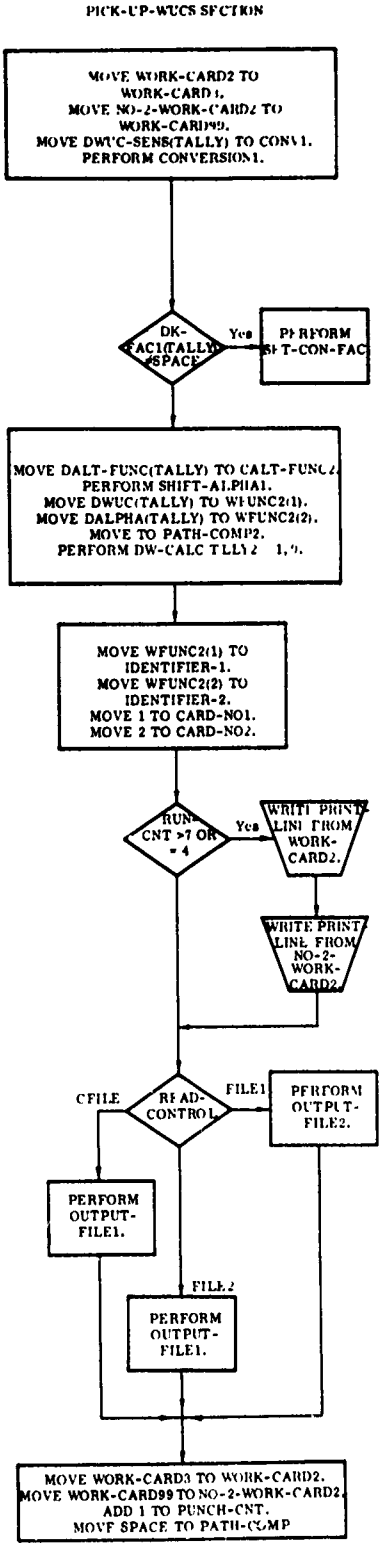

NAVY TOP-DOWN PATH GENERATOR

(Listing Items 343-361)

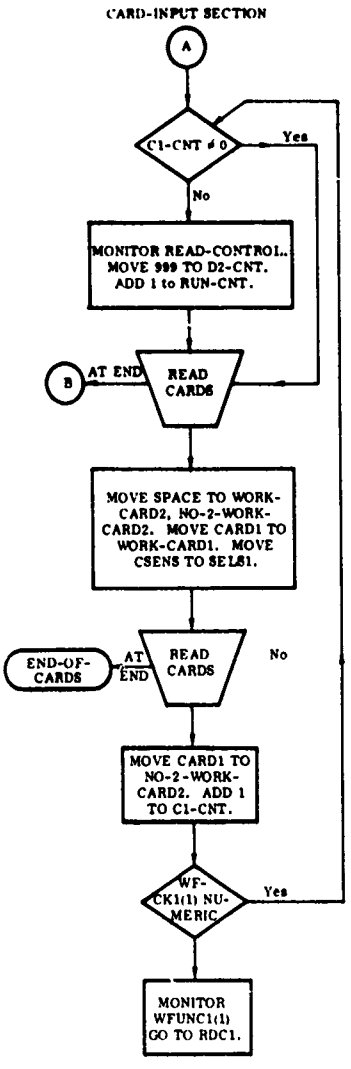

(Listing Items 362-386)

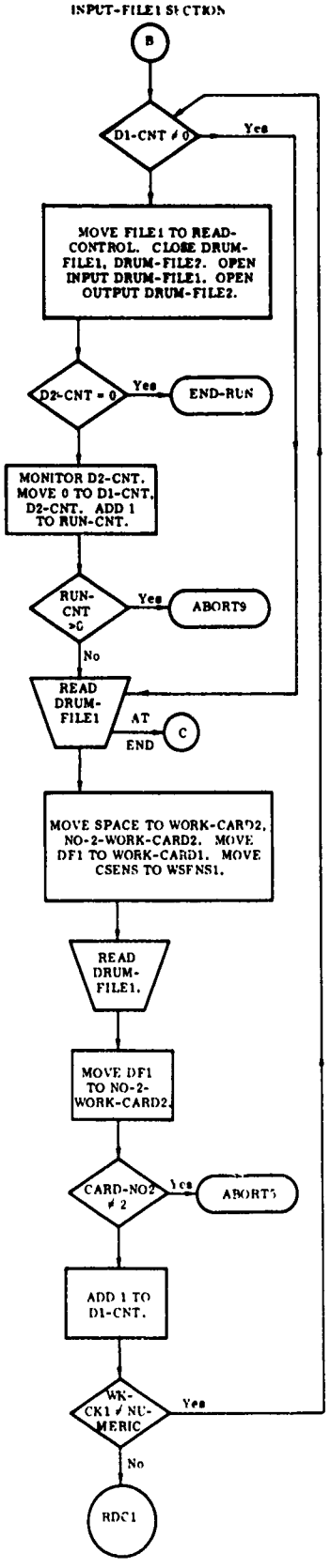

(Listing Items 386-397)

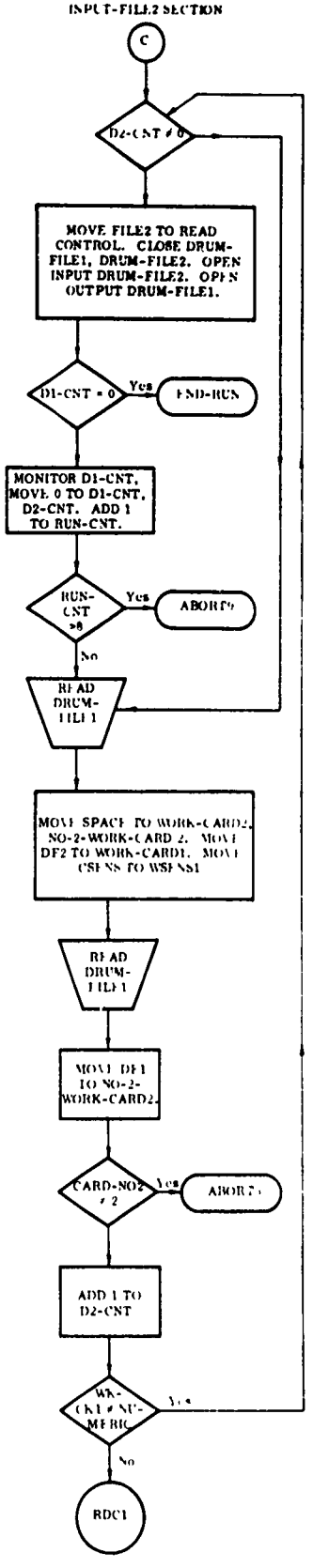

```
10:46:24    PABC COB TOPDWN,TOPDWN
COBOL UCC VERSION 2
COMPILED ON -  27 JUN 69 AT 10:46:24
                1                       IDENTIFICATION DIVISION.
                2                       PROGRAM-ID. NAVY TOP DOWN PATH GENERATER.
                3                       AUTHOR. ROBT RITTER
                4                       ENVIRONMENT DIVISION.
                5                       CONFIGURATION SECTION.
                6                       SOURCE-COMPUTER. UNIVAC-1108.
                7                       OBJECT-COMPUTER. UNIVAC-1108.
                8                       INPUT-OUTPUT SECTION.
                9                       FILE-CONTROL.
               10                           SELECT PATH-TAPE ASSIGN TO UNISERVO H
               11                               RESERVE 2 ALTERNATE AREAS.
               12                           SELECT PRINT ASSIGN TO PRINTER.
               13                           SELECT DRUM-FILE1 ASSIGN TO DRUM 700000 WORDS.
               14                           SELECT DRUM-FILE2 ASSIGN TO DRUM 700000 WORDS.
               15                           SELECT CARDS ASSIGN TO CARD-READER-EIGHTY.
               16                           SELECT DATA-TAPE ASSIGN TO UNISERVO F.
               17                           SELECT PUNCH ASSIGN TO CARD-PUNCH-EIGHTY.
               18                       DATA DIVISION.
               19                       FILE SECTION.
               20                       FD PATH-TAPE LABEL RECORD OMITTED DATA RECORD TR1
               21                           BLOCK CONTAINS 40 RECORDS.
               22                       01 TR1.
               23                           02 TR11 PICTURE X(78).
               24    13 0                   02 TR12 PICTURE XX.
               25                       FD PRINT LABEL RECORD OMITTED DATA RECORD PRINT-LINE.
               26                       01 PRINT-LINE PICTURE X(132).
               27                       FD DRUM-FILE1 LABEL RECORD OMITTED DATA RECORD DF1
               28                           BLOCK CONTAINS 40 RECORDS.
               29                       01 DF1 PICTURE X(80).
               30                       FD DRUM-FILE2 LABEL RECORD OMITTED DATA RECORD DF2
               31                           BLOCK CONTAINS 40 RECORDS.
               32                       01 DF2 PICTURE X(80).
               33                       FD PUNCH LABEL RECORD OMITTED DATA RECORD PUNCH-LINE.
               34                       01 PUNCH-LINE PICTURE X(80).
               35                       FD DATA-TAPE LABEL RECORD OMITTED DATA RECORD TAPE-REC.
               36                       01 TAPE-REC PICTURE X(2000).
               37                       FD CARDS LABEL RECORD OMITTED DATA RECORD IS CARD1.
               38                       01 CARD1 PICTURE X(80).
               39                       WORKING-STORAGE SECTION.
               40                       77 READ-CONTROL PICTURE XXXXX VALUE 'CFILE'.
               41     1 0               77 PATH-CNT     PICTURE 9(5) VALUE 0.
               42     2 0               77 RUN-CNT      PICTURE 9(5) VALUE 0.
               43     3 0               77 D1-CNT       PICTURE 9(5) VALUE 0.
               44     4 0               77 D2-CNT       PICTURE 9(5) VALUE 0.
               45     5 0               77 WUC-CNT      PICTURE 9(5) VALUE 0.
               46     6 0               77 C1-CNT       PICTURE 9(5) VALUE 0.
               47     7 0                   77 TLLY2 PICTURE 99999.
               48     8 0               77 DA-IND PICTURE 99999.
               49     9 0               77 TLLY1 PICTURE 99999.
               50    10 0               77 FALR PICTURE X.
               51    11 0               77 CONV1 PICTURE X.
               52    12 0               77 CONV2 PICTURE X.
               53    13 0               77 CONV3 PICTURE 9V99.
               54    14 0               77 Z PICTURE 99999.
               55    15 0               77 FA1       PICTURE X(6).
               56    16 0               77 FA2 PICTURE X.
               57    17 0               77 LOOP-CT PICTURE XXX.
```

```
 58    18 0          77 PUNCH-CNT PICTURE 99999,
 59    19 0          77 TLY PICTURE 99999,
 60    20 0          77 ZZZ PICTURE 99999,
 61    21 0          77 ANF PICTURE 99999,
 62    22 0          77 Y PICTURE 99999,
 63    23 0          77 X PICTURE 99999,
 64    24 0          77 ZZ PICTURE 99999,
 65    25 0          77 R PICTURE 9V9,
 66    26 0          77 RR PICTURE 9V9,
 67    27 0          77 RRR PICTURE 9V9,
 68    28 0          77 MA-IND PICTURE 99999,
 69    29 0          01 DATA-ARRAY1,
 70    29 0               02 DA1 OCCURS 4000 TIMES,
 71    29 0                  03 DALPHA,
 72    29 0                     04 DALPHA1 PICTURE X(6),
 73    30 0                     04 DALPHA2 PICTURE X,
 74    30 1                  03 DWUC PICTURE X(7),
 75    31 2                  03 DDEP-FUNC,
 76    31 2                     04 DDEP-FUNC1 PICTURE X(6),
 77    32 2                     04 DDEP-FUNC2 PICTURE X,
 78    32 3                  03 DWUC-SENS PICTURE X,
 79    32 4                  03 DPH-SENS PICTURE X(9),
 80    34 1                  03 DK-FAC,
 81    34 1                     04 DK-FAC1 PICTURE X,
 82    34 2                     04 DK-FAC2 PICTURE X,
 83    34 3                  03 DALT-FUNC PICTURE XXXX,
 84    29 0          01 DATA-ARRAY2 REDEFINES DATA-ARRAY1,
 85    29 0               02 DA2 OCCURS 74 TIMES PICTURE X(2000),
 86  4696 0          01 WORK-CARD1,
 87  4696 0               02 WFUNC1 OCCURS 8 TIMES,
 88  4696 0                  03 WF1,
 89  4696 0                     04 WF-CK1 PICTURE X,
 90  4696 1                     04 WF11 PICTURE XXXXX,
 91  4697 0                  03 WFLR PICTURE X,
 92  4705 2               02 EXTRA-SPACE PICTURE X,
 93  4705 3               02 CALT-FUNC PICTURE XXXXX,
 94  4706 3               02 CALT-LR PICTURE X,
 95  4706 4               02 CCFC1,
 96  4706 4               03 CCON-FAC OCCURS 4 TIMES PICTURE X,
 97  4707 2               02 CSENS PICTURE X(9),
 98  4708 5               02 PATH-COMP PICTURE X,
 99  4709 0          01 WORK-CARD2,
100  4709 0               02 WFUNC2 OCCURS 8 TIMES,
101  4709 0                  03 WF2,
102  4709 0                     04 WF-CK2 PICTURE X,
103  4709 1                     04 WF21 PICTURE XXXXX,
104  4710 0                  03 WFLR2 PICTURE X,
105  4718 2               02 EXTRA-SPACE2 PICTURE X,
106  4718 3               02 CALT-FUNC2 PICTURE XXXXX,
107  4719 3               02 CALT-LR2 PICTURE X,
108  4719 4               02 CCFC2,
109  4719 4               03 CCON-FAC2 OCCURS 4 TIMES PICTURE X,
110  4720 2               02 CSENS2 OCCURS 9 TIMES PICTURE X,
111  4721 5               02 PATH-COMP2 PICTURE X,
112  4722 0               02 CARD-NO1 PICTURE 99,
113  4723 0          01 NO-2-WORK-CARD2,
114  4723 0               02 IDENTIFIER-1 PICTURE X(7),
115  4724 1               02 IDENTIFIER-2 PICTURE X(7),
116  4725 2               02 ADDITIONAL-PATH-DATA,
117  4725 2                  03 APD PICTURE X(7) OCCURS 9 TIMES,
```

```
118  4735 >            02 FILLER PICTURE X.
119  4736 .            02 CARD-NO2 PICTURE 99.
120  4737 0         01 WORK-CARD99 PICTURE X(80).
121  4751 0         01 WORK-CARD3 PICTURE X(80).
122  4765 0         01 WSENS1.
123  4765 0             02 WS1 OCCURS 9 TIMES PICTURE X.
124  4767 0         01 WSENS2.
125  4767 0             02 WS2 OCCURS 9 TIMES PICTURE X.
126  4769 0         01 WSENS3.
127  4769 0             02 WS3 OCCURS 9 TIMES PICTURE X.
128  4771 0         01 LOOP-LINE PICTURE X(36) VALUE
129  4771 0             '    ****THE NEXT ENTRY IS IN A LOOP'.
130  4771 0
131  4771 0
132  4771 0
133  4771 0
134  4771 0
135  4771 0
136                 PROCEDURE DIVISION.
137                 P0.
138                     OPEN INPUT CARDS.
139                     OPEN OUTPUT PRINT.
140                     OPEN OUTPUT PATH-TAPE.
141                     OPEN OUTPUT DRUM-FILE1, DRUM-FILE2.
142                     PERFORM TAPE-INPUT.
143                     MOVE 0 TO PUNCH-CNT.
144                     GO TO CARD-INPUT.
145                 READ-DATA-CARDS SECTION.
146                 RDC1.
147                     PERFORM SHIFT-ALPHA.
148                     MOVE WF1(1) TO FA1.
149                     MOVE WFLR(1) TO FALR.
150                     MOVE 0 TO ANF.
151                     PERFORM FIND-ALPHA.
152                     IF ANF GREATER THAN 0 GO TO RDC11.
153                     PERFORM OUTPUT-SEC.
154                 RDC11.
155                     IF READ-CONTROL EQUAL 'CFILE' GO TO CARD-INPUT.
156                     IF READ-CONTROL EQUAL 'FILE1' GO TO INPUT-FILE1.
157                     IF READ-CONTROL EQUAL 'FILE2' GO TO INPUT-FILE2.
158                 END-OF-CARDS.
159                     MONITOR PUNCH-CNT.
160                     CLOSE CARDS. PRINT.
161                     STOP RUN.
162
163
164
165
166
167                 OUTPUT-SEC SECTION.
168                 OS1.
169                     PERFORM OS2 VARYING TALLY FROM DA-IND BY 1 UNTIL TALLY
170                         GREATER THAN 4000.
171                     GO TO OS-EXIT.
172                 OS2.
173                     IF DDEP-FUNC2(TALLY) NOT EQUAL DDEP-FUNC2(DA-IND) GO TO
174                         OS-EXIT.
175                     IF DDEP-FUNC1(TALLY) NOT EQUAL DDEP-FUNC1(DA-IND) GO TO
176                         OS-EXIT.
177                     IF DWUC-SENS(TALLY) EQUAL SPACE PERFORM PICK-UP-INPUTS
```

```
178                 ELSE PERFORM PICK-UP-WUCS.
179           OS-EXIT.
180               EXIT.
181
182
183
184
185
186
187           FIND-ALPHA SECTION.
188           FF1.
189               MOVE 0 TO ZZZ.
190               PERFORM FF5 VARYING TLY FROM 100 BY 100 UNTIL ZZZ
191                   GREATER THAN 0.
192               IF TLY EQUAL 200 MOVE 201 TO TLY.
193               SUBTRACT 200 FROM TLY GIVING X. MOVE 0 TO Y. ZZZ.
194               PERFORM FF6 VARYING TLY FROM X BY 10 UNTIL ZZZ
195                   GREATER THAN 0.
196               IF TLY LESS THAN 21 MOVE 21 TO TLY.
197               SUBTRACT 20 FROM TLY GIVING X. MOVE 0 TO Y. ZZZ.
198               PERFORM FF7 VARYING TLY FROM X BY 1 UNTIL ZZZ EQUAL 999.
199               SUBTRACT 1 FROM TLY.
200           FF11.
201               MOVE TLY TO DA-IND.
202               GO TO FF-EXIT.
203           FF5.
204               IF TLY GREATER THAN 4000 PERFORM ALPHA-NOT-FOUND.
205               IF ANF GREATER THAN 0 GO TO FF-EXIT.
206               IF DDEP-FUNC1(TLY) EQUAL FA1 AND DDEP-FUNC2(TLY) EQUAL FALR
207                   MOVE 999 TO ZZZ.
208               IF DDEP-FUNC1(TLY) GREATER THAN FA1 MOVE 999 TO ZZZ.
209               IF DDEP-FUNC1(TLY) EQUAL FA1 AND DDEP-FUNC2(TLY) GREATER THAN
210                   FALR MOVE 999 TO ZZZ.
211               IF DDEP-FUNC1(TLY) EQUAL SPACE MOVE 999 TO ZZZ.
212           FF6.
213               IF DDEP-FUNC1(TLY) EQUAL FA1 AND DDEP-FUNC2(TLY) EQUAL FALR
214                   MOVE 999 TO ZZZ.
215               IF DDEP-FUNC1(TLY) GREATER THAN FA1 MOVE 999 TO ZZZ.
216               IF DDEP-FUNC1(TLY) EQUAL FA1 AND DDEP-FUNC2(TLY) GREATER THAN
217                   FALR MOVE 999 TO ZZZ.
218               IF DDEP-FUNC(TLY) EQUAL SPACE MOVE 999 TO ZZZ.
219               ADD 1 TO Y.
220               IF Y GREATER THAN 11 GO TO ALPHA-NOT-FOUND.
221               IF ANF GREATER THAN 0 GO TO FF-EXIT.
222           FF7.
223               IF DDEP-FUNC1(TLY) EQUAL FA1 AND DDEP-FUNC2(TLY) EQUAL FALR
224                   MOVE 999 TO ZZZ.
225               ADD 1 TO Y.
226               IF Y GREATER THAN 11 GO TO ALPHA-NOT-FOUND.
227               IF ANF GREATER THAN 0 GO TO FF-EXIT.
228           FF-EXIT.
229               EXIT.
230
231
232
233
234
235
236           PICK-UP-INPUTS SECTION.
237           PU1.
```

```
238                 PERFORM PU2.
239                 GO TO PU-EXIT.
240             PU2.
241                 MOVE DPH-SENS(TALLY) TO WSENS2.
242                 IF DK-FAC1(TALLY) NOT EQUAL SPACE PERFORM SET-CON-FAC.
243                 MOVE DALT-FUNC(TALLY) TO CALT-FUNC2.
244                 MOVE DALPHA(TALLY) TO WFUNC2(1).
245                 PERFORM PU-CALC VARYING TLLY2 FROM 1 BY 1 UNTIL TLLY2
246                     GREATER THAN 9.
247                 MOVE WFUNC2(1) TO IDENTIFIER-1.
248                 MOVE WFUNC2(2) TO IDENTIFIER-2.
249                 MOVE 1 TO CARD-NO1.
250                 MOVE 2 TO CARD-NO2.
251                 PERFORM CHECK-FOR-LOOP.
252                 IF LOOP-CK EQUAL 'YES' GO TO PU-EXIT.
253                 IF RUN-CNT GREATER THAN 3  PERFORM FINAL-OUTPUT.
254                 IF READ-CONTROL EQUAL 'CFILE' PERFORM OUTPUT-FILE1.
255                 IF READ-CONTROL EQUAL 'FILE1' PERFORM OUTPUT-FILE2.
256                 IF READ-CONTROL EQUAL 'FILE2' PERFORM OUTPUT-FILE1.
257                 ADD 1 TO ZZZ, PUNCH-CNT.
258             CHECK-FOR-LOOP.
259                 MOVE SPACE TO LOOP-CK.
260                 IF IDENTIFIER-1 EQUAL WFUNC2(2) MOVE  'YES' TO LOOP-CK.
261                 IF IDENTIFIER-1 EQUAL WFUNC2(3) MOVE  'YES' TO LOOP-CK.
262                 IF IDENTIFIER-1 EQUAL WFUNC2(4) MOVE  'YES' TO LOOP-CK.
263                 IF IDENTIFIER-1 EQUAL WFUNC2(5) MOVE  'YES' TO LOOP-CK.
264                 IF IDENTIFIER-1 EQUAL WFUNC2(6) MOVE  'YES' TO LOOP-CK.
265                 IF IDENTIFIER-1 EQUAL WFUNC2(7) MOVE  'YES' TO LOOP-CK.
266                 IF IDENTIFIER-1 EQUAL WFUNC2(8) MOVE  'YES' TO LOOP-CK.
267                 IF IDENTIFIER-1 EQUAL  APD(3)   MOVE  'YES' TO LOOP-CK.
268                 IF IDENTIFIER-1 EQUAL  APD(4)   MOVE  'YES' TO LOOP-CK.
269                 IF IDENTIFIER-1 EQUAL  APD(5)   MOVE  'YES' TO LOOP-CK.
270                 IF IDENTIFIER-1 EQUAL  APD(6)   MOVE  'YES' TO LOOP-CK.
271                 IF IDENTIFIER-1 EQUAL  APD(7)   MOVE  'YES' TO LOOP-CK.
272                 IF IDENTIFIER-1 EQUAL  APD(8)   MOVE  'YES' TO LOOP-CK.
273                 IF IDENTIFIER-1 EQUAL  APD(9)   MOVE  'YES' TO LOOP-CK.
274                 IF LOOP-CK EQUAL 'YES' WRITE PRINT-LINE FROM LOOP-LINE.
275                 IF LOOP-CK EQUAL 'YES'
276                 WRITE PRINT-LINE FROM WORK-CARD2.
277                 IF LOOP-CK EQUAL 'YES'
278                 WRITE PRINT-LINE FROM NO-2-WORK-CARD2.
279             PU-DUMBY.
280                 MONITOR Y.
281             PU-EXIT.
282                 EXIT.
283
284
285
286
287
288
289             PICK-UP-WUCS SECTION.
290             PW1.
291                 MOVE WORK-CARD2 TO WORK-CARD3.
292                 MOVE NO-2-WORK-CARD2 TO WORK-CARD99.
293                 MOVE DWUC-SENS(TALLY) TO CONV1.
294                 PERFORM CONVERSION1.
295                 IF DK-FAC1(TALLY) NOT EQUAL SPACE PERFORM SET-CON-FAC.
296                 MOVE DALT-FUNC(TALLY) TO CALT-FUNC2.
297                 PERFORM SHIFT-ALPHA1.
```

```
298                 MOVE DWUC(TALLY) TO WFUNC2(1),
299                 MOVE DALPHA(TALLY) TO WFUNC2(2),
300                 MOVE '0' TO PATH-COMP2,
301                 PERFORM PW-CALC VARYING TLLY2 FROM 1 BY 1 UNTIL TLLY2
302                     GREATER THAN 9,
303                 MOVE WFUNC2(1) TO IDENTIFIER-1,
304                 MOVE WFUNC2(2) TO IDENTIFIER-2,
305                 MOVE 1 TO CARD-NO1,
306                 MOVE 2 TO CARD-NO2,
307                 IF RUN-CNT GREATER THAN 3  PERFORM FINAL-OUTPUT,
308                 IF READ-CONTROL EQUAL 'CFILE' PERFORM OUTPUT-FILE1,
309                 IF READ-CONTROL EQUAL 'FILE1' PERFORM OUTPUT-FILE2,
310                 IF READ-CONTROL EQUAL 'FILE2' PERFORM OUTPUT-FILE1,
311                 MOVE WORK-CARD3 TO WORK-CARD2,
312                 MOVE WORK-CARD99 TO NO-2-WORK-CARD2,
313                 ADD 1 TO PUNCH-CNT,
314                 MOVE SPACE TO PATH-COMP2,
315
316
317
318
319
320
321
322
323
324             TAPE-INPUT SECTION,
325             TI1,
326                 OPEN INPUT DATA-TAPE,
327                 PERFORM TI2 VARYING TALLY FROM 1 BY 1 UNTIL
328                     TALLY GREATER THAN 74,
329                 CLOSE DATA-TAPE,
330                 GO TO TI-EXIT,
331             TI2,
332                 READ DATA-TAPE AT END GO TO TI-EXIT,
333                 MOVE TAPE-REC TO DA2(TALLY),
334             TI-EXIT,
335                 EXIT,
336
337
338
339
340
341
342             CARD-INPUT SECTION,
343             CS1,
344                 IF C1-CNT NOT EQUAL 0 GO TO CS2,
345                 MONITOR READ-CONTROL,
346                 MOVE 999 TO D2-CNT,
347                 ADD 1 TO RUN-CNT,
348             CS2,
349                 READ CARDS AT END GO TO  INPUT-FILE1,
350                 MOVE SPACE TO WORK-CARD2,
351                 MOVE SPACE TO NO-2-WORK-CARD2,
352                 MOVE CARD1 TO WORK-CARD1,
353                 MOVE CSENS TO WSENS1,
354                 READ CARDS AT END GO TO END-OF-CARDS,
355                 MOVE CARD1 TO  NO-2-WORK-CARD2,
356                 ADD 1 TO C1-CNT,
357                 IF WF-CK1(1) NUMERIC GO TO   CARD-INPUT,
```

```
358                 CS-EXIT.
359                     MONITOR WFUNC1(1).
360                     GO TO RDC1.
361                 INPUT-FILE1 SECTION.
362                 IF11.
363                     IF D1-CNT NOT EQUAL 0 GO TO IF12.
364                     MOVE 'FILE1' TO READ-CONTROL.
365                     MONITOR READ-CONTROL.
366                     CLOSE DRUM-FILE1, DRUM-FILE2.
367                     OPEN INPUT DRUM-FILE1, OPEN OUTPUT DRUM-FILE2.
368                     IF D2-CNT EQUAL 0 GO TO END-RUN.
369                     MONITOR D2-CNT.
370                     MOVE 0 TO D1-CNT, D2-CNT.
371                     ADD 1 TO RUN-CNT.
372                     IF RUN-CNT GREATER THAN 4  GO TO ABORT9.
373                 IF12.
374                     READ DRUM-FILE1 AT END GO TO INPUT-FILE2.
375                     MOVE SPACE TO WORK-CARD2, NO-2-WORK-CARD2.
376                     MOVE DF1 TO WORK-CARD1.
377                     MOVE CCFC1 TO CCFC2.
378                     MOVE CSENS TO WSENS1.
379                     READ DRUM-FILE1 AT END GO TO INPUT-FILE2.
380                     MOVE DF1 TO NO-2-WORK-CARD2.
381                     IF CARD-NO2 NOT EQUAL 2 GO TO ABORT5.
382                     ADD 1 TO D1-CNT.
383                     IF WF-CK1(1) NUMERIC GO TO  INPUT-FILE1.
384                 IF1-EXIT.
385                     GO TO RDC1.
386                 INPUT-FILE2 SECTION.
387                 IF21.
388                     IF D2-CNT NOT EQUAL 0 GO TO IF22.
389                     MOVE 'FILE2' TO READ-CONTROL.
390                     MONITOR READ-CONTROL.
391                     CLOSE DRUM-FILE1, DRUM-FILE2.
392                     OPEN INPUT DRUM-FILE2, OPEN OUTPUT DRUM-FILE1.
393                     IF D1-CNT EQUAL 0 GO TO END-RUN.
394                     MONITOR D1-CNT.
395                     MOVE 0 TO D1-CNT, D2-CNT.
396                     ADD 1 TO RUN-CNT.
397                     IF RUN-CNT GREATER THAN 4  GO TO ABORT9.
398                 IF22.
399                     READ DRUM-FILE2 AT END GO TO INPUT-FILE1.
400                     MOVE SPACE TO WORK-CARD2, NO-2-WORK-CARD2.
401                     MOVE DF2 TO WORK-CARD1.
402                     MOVE CCFC1 TO CCFC2.
403                     MOVE CSENS TO WSENS1.
404                     READ DRUM-FILE2 AT END GO TO INPUT-FILE1.
405                     MOVE DF2 TO NO-2-WORK-CARD2.
406                     IF CARD-NO2 NOT EQUAL 2 GO TO ABORT5.
407                     ADD 1 TO D2-CNT.
408                     IF WF-CK1(1) NUMERIC GO TO  INPUT-FILE2.
409                 IF2-EXIT.
410                     GO TO RDC1.
411                 MISC SECTION.
412                 OUTPUT-FILE1.
413                     WRITE DF1 FROM WORK-CARD2.
414                     WRITE DF1 FROM NO-2-WORK-CARD2.
415                     WRITE TR1 FROM WORK-CARD2.
416                     WRITE TR1 FROM  NO-2-WORK-CARD2.
417                     ADD 1 TO PATH-CNT.
```

```
418                 OUTPUT-FILE2.
419                     WRITE DF2 FROM WORK-CARD2.
420                     WRITE DF2 FROM NO-2-WORK-CARD2.
421                     WRITE TR1 FROM WORK-CARD2.
422                     WRITE TR1 FROM  NO-2-WORK-CARD2.
423                     ADD 1 TO PATH-CNT.
424                 FINAL-OUTPUT.
425                     WRITE PRINT-LINE FROM WORK-CARD2.
426                     WRITE PRINT-LINE FROM NO-2-WORK-CARD2.
427                 ABORT9.
428                     MONITOR RUN-CNT, PATH-CNT.
429                     STOP RUN.
430                 ABORT8.
431                     MONITOR CARD1.
432                     STOP RUN.
433                 ALPHA-NOT-FOUND.
434                     MOVE 99 TO ANF.
435                     MONITOR FA1.
436                     GO TO FF-EXIT.
437                 SHIFT-ALPHA.
438                     MOVE APD(8) TO APD(9).
439                     MOVE APD(7) TO APD(8).
440                     MOVE APD(6) TO APD(7).
441                     MOVE APD(5) TO APD(6).
442                     MOVE APD(4) TO APD(5).
443                     MOVE APD(3) TO APD(4).
444                     MOVE APD(2) TO APD(3).
445                     MOVE APD(1) TO APD(2).
446                     MOVE WFUNC1(8) TO APD(1).
447                     MOVE WFUNC1(7) TO WFUNC2(8).
448                     MOVE WFUNC1(6) TO WFUNC2(7).
449                     MOVE WFUNC1(5) TO WFUNC2(6).
450                     MOVE WFUNC1(4) TO WFUNC2(5).
451                     MOVE WFUNC1(3) TO WFUNC2(4).
452                     MOVE WFUNC1(2) TO WFUNC2(3).
453                     MOVE WFUNC1(1) TO WFUNC2(2).
454                 SHIFT-ALPHA1.
455                     MOVE APD(8) TO APD(9).
456                     MOVE APD(7) TO APD(8).
457                     MOVE APD(6) TO APD(7).
458                     MOVE APD(5) TO APD(6).
459                     MOVE APD(4) TO APD(5).
460                     MOVE APD(3) TO APD(4).
461                     MOVE APD(2) TO APD(3).
462                     MOVE APD(1) TO APD(2).
463                     MOVE WFUNC2(8) TO APD(1).
464                     MOVE  WFUNC2(7) TO WFUNC2(8).
465                     MOVE  WFUNC2(6) TO WFUNC2(7).
466                     MOVE  WFUNC2(5) TO WFUNC2(6).
467                     MOVE  WFUNC2(4) TO WFUNC2(5).
468                     MOVE  WFUNC2(3) TO WFUNC2(4).
469                     MOVE  WFUNC2(2) TO WFUNC2(3).
470                 SET-CON-FAC.
471                     IF CCON-FAC(1) EQUAL SPACE MOVE DK-FAC1(TALLY) TO CCON-FAC2(1)
472                         ELSE MOVE DK-FAC1(TALLY) TO CCON-FAC2(2).
473                     IF DK-FAC2(TALLY) NOT EQUAL SPACE AND CCON-FAC2(3) EQUAL
474                         SPACE MOVE DK-FAC2(TALLY) TO CCON-FAC2(3).
475                 PU-CALC.
476                     MOVE WS1(TLLY2) TO CONV1.
477                     MOVE WS2(TLLY2) TO CONV2.
```

```
                    PERFORM CONVERSION1.
                    COMPUTE RRR ROUNDED = RR * R ON SIZE ERROR MOVE 1 TO RRR.
                    MOVE RRR TO CONV3.
                    PERFORM CONVERSION2.
                PW-CALC.
                    MOVE WS1(TLLY2) TO CONV2.
                    PERFORM CONVERSION1.
                    COMPUTE RRR ROUNDED = RR * R ON SIZE ERROR MOVE 1 TO RRR.
                    MOVE RRR TO CONV3.
                    PERFORM CONVERSION2.
                CONVERSION1.
                    IF CONV1 EQUAL 'A' MOVE 1 TO RR.
                    IF CONV1 EQUAL '0' MOVE .0 TO RR.
                    IF CONV1 EQUAL '1' MOVE .1 TO RR.
                    IF CONV1 EQUAL '2' MOVE .2 TO RR.
                    IF CONV1 EQUAL '3' MOVE .3 TO RR.
                    IF CONV1 EQUAL '4' MOVE .4 TO RR.
                    IF CONV1 EQUAL '5' MOVE .5 TO RR.
                    IF CONV1 EQUAL '6' MOVE .6 TO RR.
                    IF CONV1 EQUAL '7' MOVE .7 TO RR.
                    IF CONV1 EQUAL '8' MOVE .8 TO RR.
                    IF CONV1 EQUAL '9' MOVE .9 TO RR.
                    IF CONV2 EQUAL 'A' MOVE 1 TO R.
                    IF CONV2 EQUAL '1' MOVE .1 TO R.
                    IF CONV2 EQUAL '2' MOVE .2 TO R.
                    IF CONV2 EQUAL '3' MOVE .3 TO R.
                    IF CONV2 EQUAL '4' MOVE .4 TO R.
                    IF CONV2 EQUAL '5' MOVE .5 TO R.
                    IF CONV2 EQUAL '6' MOVE .6 TO R.
                    IF CONV2 EQUAL '7' MOVE .7 TO R.
                    IF CONV2 EQUAL '8' MOVE .8 TO R.
                    IF CONV2 EQUAL '9' MOVE .9 TO R.
                    IF CONV2 EQUAL '0' MOVE .0 TO R.
                    IF CONV1 = '0' MOVE .0 TO RR.
                CONVERSION2.
                    IF CONV3 EQUAL  1 MOVE 'A' TO CSENS2(TLLY2).
                    IF CONV3 EQUAL .0 MOVE '0' TO CSENS2(TLLY2).
                    IF CONV3 EQUAL .1 MOVE '1' TO CSENS2(TLLY2).
                    IF CONV3 EQUAL .2 MOVE '2' TO CSENS2(TLLY2).
                    IF CONV3 EQUAL .3 MOVE '3' TO CSENS2(TLLY2).
                    IF CONV3 EQUAL .4 MOVE '4' TO CSENS2(TLLY2).
                    IF CONV3 EQUAL .5 MOVE '5' TO CSENS2(TLLY2).
                    IF CONV3 EQUAL .6 MOVE '6' TO CSENS2(TLLY2).
                    IF CONV3 EQUAL .7 MOVE '7' TO CSENS2(TLLY2).
                    IF CONV3 EQUAL .8 MOVE '8' TO CSENS2(TLLY2).
                    IF CONV3 EQUAL .9 MOVE '9' TO CSENS2 (LLY2).
                END-RUN.
                    MONITOR PATH-CNT.
                    STOP RUN.
ERROR   0431    AS M OPTION IS OFF THIS IS SUPRESSED HEREAFTER!- ABORT
ERROR   0431    DUPLICATE INTERPROGRAM (5 CHAR) PARAGRAPH NAME,  ABORT
ERROR   0474    SIGN PRESENT ON FIELD SHOULD BE POSITIVE
ERROR   0474    SIGN PRESENT ON FIELD SHOULD BE POSITIVE
ERROR   0472    SIGN PRESENT ON FIELD SHOULD BE POSITIVE
ERROR   0471    SIGN PRESENT ON FIELD SHOULD BE POSITIVE
ERROR   0333    SIGN PRESENT ON FIELD SHOULD BE POSITIVE
ERROR   0299    SIGN PRESENT ON FIELD SHOULD BE POSITIVE
ERROR   0298    SIGN PRESENT ON FIELD SHOULD BE POSITIVE
ERROR   0296    SIGN PRESENT ON FIELD SHOULD BE POSITIVE
ERROR   0295    SIGN PRESENT ON FIELD SHOULD BE POSITIVE

COBOL COMPILATION TIME      11 SECONDS.
```

NAVY TOP-DOWN PATH GENERATOR (PAGE 9 OF 9)

CRITICALITY-CALCULATIONS

(Listing Items 162-179)

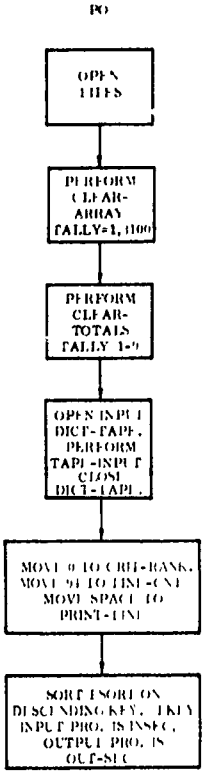

(Listing Items 184-208)

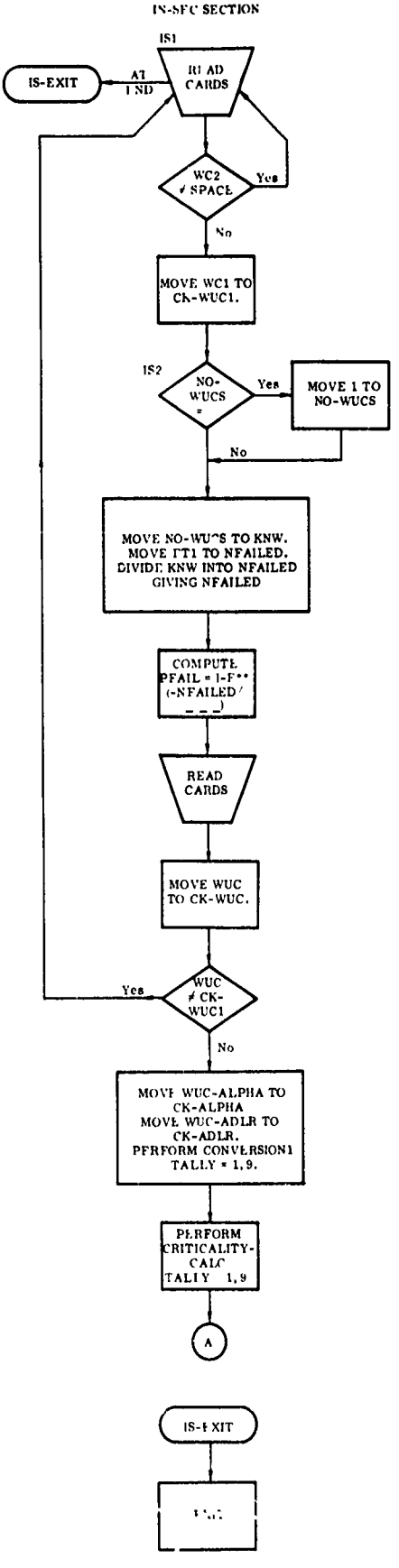

CRITICALITY-CALCULATIONS

(Listing Items 184-208)

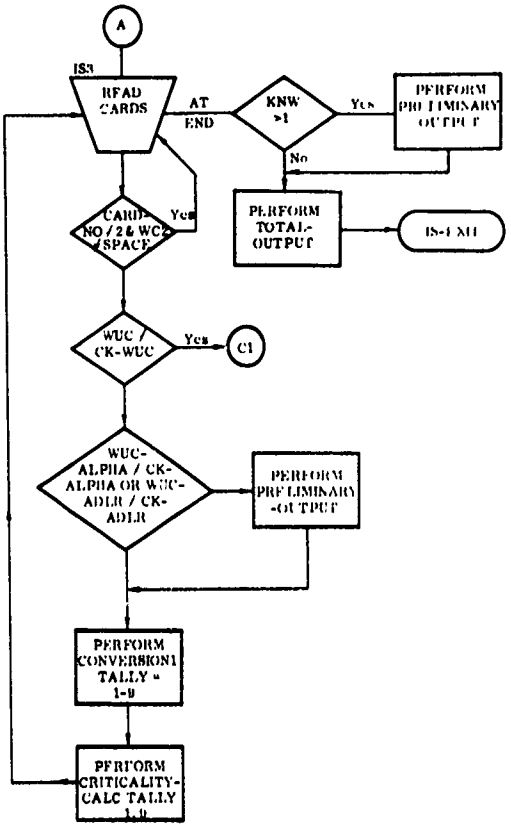

(Listing Items 209-219)

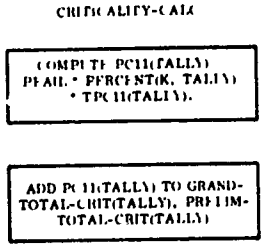

(Listing Items 225-234)

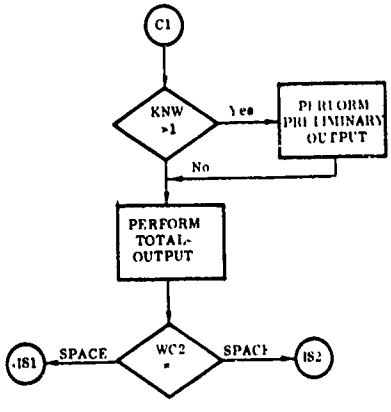

CRITICALITY-CALCULATIONS

(Listing Items 240-264)

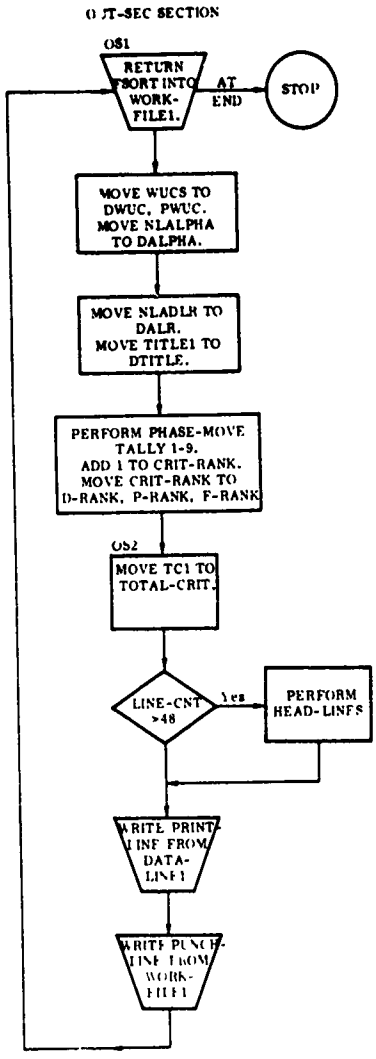

(Listing Items 313-336)

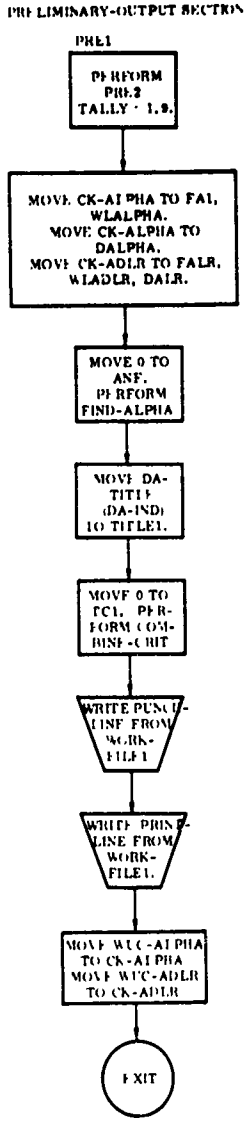

(Listing Items 340-360)

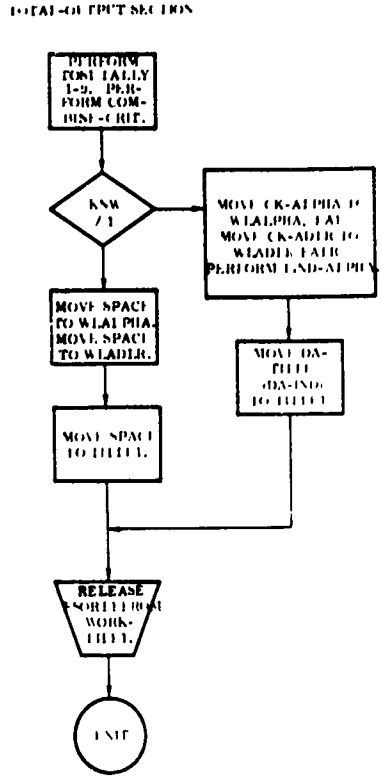

```
10:46:36    @ABC COB CRIT,CRIT
COBOL UCC VERSION 2
COMPILED ON -  27 JUN 69 AT 10:46:36
             1                      IDENTIFICATION DIVISION.
             2                      PROGRAM-ID. CRITICALITY-CALCULATIONS.
             3                      AUTHOR. ROBERT RITTER.
             4                      ENVIRONMENT DIVISION.
             5                      CONFIGURATION SECTION.
             6                      OBJECT-COMPUTER. UNIVAC-1108.
             7                      SOURCE-COMPUTER. UNIVAC-1108.
             8                      INPUT-OUTPUT SECTION.
             9                      FILE-CONTROL.
            10                          SELECT CARDS ASSIGN TO UNISERVO F RESERVE 2 ALTERNATE AREAS.
            11                          SELECT PRINT ASSIGN TO PRINTER.
            12                          SELECT FSORT ASSIGN TO DRUM 100000 WORDS.
            13                          SELECT DICT-TAPE ASSIGN TO UNISERVO H.
            14                          SELECT PUNCH ASSIGN TO CARD-PUNCH-EIGHTY.
            15                      DATA DIVISION.
            16                      FILE SECTION.
            17                      FD CARDS LABEL RECORD STANDARD VALUE OF ID IS
            18                          'NAVY PATH DATA' DATA RECORDS ARE CARD1, CARD2 BLOCK
            19                          CONTAINS 40 RECORDS.
            20                      01 CARD1.
            21                          02 WC1 PICTURE XXXXXX.
            22      1 1                 02 WC2 PICTURE XXXXXX.
            23      2 2                 02 FT1 PICTURE 9(6).
            24      3 2                 02 FT2 PICTURE 9999.
            25      4 0                 02 FT3 PICTURE 99999.
            26      4 5                 02 FILLER PICTURE X(49).
            27     13 0                 02 NO-WUCS PICTURE 99.
            28                      01 CARD2.
            29                          02 WUC.
ERROR*  0029                  CLASS IS UNSPECIFIED FOR ELEMENTARY ITEM.
ERROR*  0029                  SIZE OF ITEM IS MISSING.
            30                          02 WS1 PICTURE X.
            31      0 1                 02 WS2 PICTURE X.
            32      0 1                     03 WUC-REST PICTURE XXXXX.
            33      1 0                 02 WUC-ALPHA PICTURE XXXXXX.
            34      2 0                 02 WUC-ADLR PICTURE X.
            35      2 1                 02 FILLER PICTURE X(54).
            36     11 1                 02 PH-SENS PICTURE X OCCURS 9 TIMES.
            37     12 4                 02 FILLER PICTURE X.
            38     12 5                 02 CARD-NO PICTURE 99.
            39                      FD PRINT LABEL RECORD OMITTED DATA RECORD PRINT-LINE.
            40                      01 PRINT-LINE PICTURE X(132).
            41                      SD FSORT FILE CONTAINS ABOUT 2000 RECORDS DATA RECORD FSORT1.
            42                      01 FSORT1.
            43                          02 FS1 PICTURE X(41).
            44      6 5                 02 FS2 OCCURS 9 TIMES PICTURE 9V9(5).
            45     15 5                 02 FKEY PICTURE 9V9(5).
            46     16 5                 02 F-RANK PICTURE 99999.
            47                      FD PUNCH LABEL RECORD OMITTED DATA RECORD PUNCH-LINE.
            48                      01 PUNCH-LINE.
            49                          02 PWUC PICTURE X(7).
            50      1 1                 02 PL1.
            51      1 1                     03 PL11 PICTURE 9V9(5)  OCCURS 9 TIMES.
            52     10 1                 02 PL2 PICTURE 9V99999.
            53     11 1                 02 P-RANK PICTURE 99999.
            54                      FD DICT-TAPE LABEL RECORD OMITTED DATA RECORD DICT-ENTRY.
            55                      01 DICT-ENTRY.
```

```
                    02 DT-ALPHA PICTURE XXXXXX.
                    02 DT-ADLR PICTURE X.
                    02 DT-WUC PICTURE XXXXXXX.
                    02 DT-TITLE PICTURE X(27).
                WORKING-STORAGE SECTION.
                77 CK-WUC PICTURE XXXXXXX.
                77 CK-WUC1 PICTURE XXXXXXX.
                77 NFAILED PICTURE 999V999.
                77 FA1 PICTURE XXXXXX.
                77 CRIT-RANK PICTURE 99999.
                77 LINE-CNT PICTURE 999.
                77 TI-CNT PICTURE 99999.
                77 KNW PICTURE 99999.
                77 CK-ALPHA PICTURE XXXXXX.
                77 CK-ADLR PICTURE X.
                77 ANF PICTURE 9.
                77 X PICTURE 99999.
                77 Y PICTURE 99999.
                77 ZZZ PICTURE 99999.
                77 TLY PICTURE 99999.
                77 FALR PICTURE X.
                77 PFAIL PICTURE 9V9(8).
                77 DA-IND PICTURE 99999.
                77 E PICTURE 9V9(5) VALUE 2.71828.
                01 TITLE-ARRAY.
                    02 TITLE-ENTRY OCCURS 3100 TIMES.
                    03 DA-ALPHA PICTURE XXXXXX.
                    03 DA-ADLR PICTURE X.
                    03 DA-WUC PICTURE XXXXXXX.
                    03 DA-TITLE PICTURE X(27).
                01 PHASE-PERCENTAGE-OF-FAILURES.
                    02 PP1 PICTURE X(18) VALUE '394852585575716179'.
                    02 PERCENT REDEFINES PP1 PICTURE V99 OCCURS 9 TIMES.
                01 ADDITIONAL-PERCENTAGES.
                    02 PP2 PICTURE X(18) VALUE
                    '283734717348546 3'.
                    02 PP3 PICTURE X(18) VALUE
                    '417475687981818989'.
                    02 PP4  PICTURE X(18) VALUE
                    '054126201824216286'.
                    02 PP5  PICTURE X(18) VALUE
                    '394853585574716179'.
                    02 PP6  PICTURE X(18) VALUE
                    '276575499789738583'.
                    02 PP7  PICTURE X(18) VALUE
                    '460245454399464854'.
                    02 PP8  PICTURE X(18) VALUE
                    '334243397259435058'.
                    02 PP9  PICTURE X(18) VALUE
                    '163844322112053027'.
                    02 PP10 PICTURE X(18) VALUE
                    '384356576387706884'.
                    02 PP11 PICTURE X(18) VALUE
                    '532331401264425190'.
                    02 PP12 PICTURE X(18) VALUE
                    '414651673853525570'.
                    02 PP13 PICTURE X(18) VALUE
                    '486571678277838988'.
                    02 PP14 PICTURE X(18) VALUE
                    '508193997080999999'.
```

```
                02 PP15 PICTURE X(18) VALUE
                '344670613917716956'.
                02 PP16 PICTURE X(18) VALUE
                '597275817297908887'.
            01 WORK-FILE1.
                02 WUC1 PICTURE X(7).
                02 WLALPHA PICTURE XXXXXX.
                02 WLADLR PICTURE X.
                02 TITLE1 PICTURE X(27).
                02 FC1.
                    03 FC11 OCCURS 9 TIMES PICTURE 9V99999.
                02 TC1 PICTURE 9V99999.
                02 T-RANK PICTURE 99999.
            01 GRAND-TOTAL-CRIT PICTURE 9V99999 OCCURS 9 TIMES.
            01 PRELIM-TOTAL-CRIT PICTURE 9V99999 OCCURS 9 TIMES.
            01 TEMP-FC1.
                02 TFC11 OCCURS 9 TIMES PICTURE 9V99999.
            01 DATA-LINE1.
                02 DWUC PICTURE XXXXXXBB.
                02 DALPHA PICTURE XXXXXX.
                02 DALR PICTURE X.
                02 FILL1 PICTURE X.
                02 DTITLE PICTURE X(27)BB.
                02 PH-CRIT PICTURE Z,9(5)B OCCURS 9 TIMES.
                02 TOTAL-CRIT PICTURE Z,99999.
                02 D-RANK PICTURE BBBZZZZ.
ERROR.  0142      1     INCOMPATABLE CHARACTERS IN PICTURE OR CONFLICT IN EDITING.
            01 HEAD1.
                02 H11 PICTURE X(57) VALUE
                '                                                    ----------'.
                02 H12 PICTURE X(58) VALUE
              - '---- CRITICALITIES BY FLIGHT PHASE ----------------------'.
                02 H13 PICTURE X(18) VALUE
              -  '   TOTAL   CRIT'.
            01 HEAD2.
                02 H21 PICTURE X(59) VALUE
                ' WUC     ALPHA       WUC-TITLE                    PH1     PH2'.
                02 H22 PICTURE X(56) VALUE
              -  '     PH3     PH4     PH5     PH6     PH7     PH8     PH9',
                02 H23 PICTURE X(23) VALUE
              -  '    CRIT   RANK'.



        PROCEDURE DIVISION.
        P0.
            OPEN INPUT CARDS. OPEN OUTPUT PRINT.
            OPEN OUTPUT PUNCH.
            PERFORM CLEAR-ARRAY VARYING TALLY FROM 1 BY 1 UNTIL TALLY
                GREATER THAN 3100.
            PERFORM CLEAR-TOTALS VARYING TALLY FROM 1 BY 1 UNTIL TALLY
                GREATER THAN 9.
            OPEN INPUT DICT-TAPE.
            MOVE 0 TO TI-CNT.
            PERFORM TAPE-INPUT VARYING TALLY FROM 1 BY 1 UNTIL TALLY
                GREATER THAN 3100.
            CLOSE DICT-TAPE.
            MOVE 0 TO LINE-CNT, CRIT-RANK.
```

```
175                 MOVE 99 TO LINE-CNT.
176                 MOVE SPACE TO DATA-LINE1.
177                 SORT FSORT ON DESCENDING KEY FKEY INPUT PROCEDURE IS
178                     IN-SEC OUTPUT PROCEDURE IS OUT-SEC.
179
180
181
182
183
184             IN-SEC SECTION.
185             IS1.
186                 READ CARDS AT END GO TO IS-EXIT.
187                 IF WC2 NOT EQUAL SPACE GO TO IS1.
188                 MOVE WC1 TO CK-WUC1.
189             IS2.
190                 IF NO-WUCS EQUAL '  ' MOVE 1 TO NO-WUCS.
191                 MOVE NO-WUCS TO KNW.
192                 MOVE FT1 TO NFAILED.
193                 IF KNW EQUAL SPACE MOVE 1 TO KNW.
194                 DIVIDE KNW INTO NFAILED GIVING NFAILED.
195                 COMPUTE PFAIL ROUNDED = 1 - E ** (- NFAILED / 9463)
196                     ON SIZE ERROR MONITOR NFAILED.
197                 READ CARDS AT END GO TO ABORT1.
198                 MOVE WUC TO CK-WUC.
199                 IF WUC NOT EQUAL CK-WUC1 GO TO IS1.
200                 PERFORM SET-PERCENT.
201                 MOVE WUC TO WUC1.
202                 MOVE WUC-ALPHA TO CK-ALPHA.
203                 MOVE WUC-ADLR TO CK-ADLR.
204                 PERFORM CONVERSION1 VARYING TALLY FROM 1 BY 1 UNTIL TALLY
205                     GREATER THAN 9.
206                 MOVE WUC-ALPHA TO CK-ALPHA. MOVE WUC-ADLR TO CK-ADLR.
207                 PERFORM CRITICALITY-CALC VARYING TALLY FROM 1 BY 1 UNTIL TALLY
208                     GREATER THAN 9.
209             IS3.
210                 READ CARDS AT END GO TO IS11.
211                 IF CARD-NO EQUAL 2 AND WC2 NOT EQUAL SPACE GO TO IS3.
212                 IF WUC NOT EQUAL CK-WUC GO TO C1.
213                 IF WUC-ALPHA NOT EQUAL CK-ALPHA OR WUC-ADLR NOT EQUAL
214                     CK-ADLR PERFORM PRELIMINARY-OUTPUT.
215                 PERFORM CONVERSION1 VARYING TALLY FROM 1 BY 1 UNTIL TALLY
216                     GREATER THAN 9.
217                 PERFORM CRITICALITY-CALC VARYING TALLY FROM 1 BY 1 UNTIL
218                     TALLY GREATER THAN 9.
219                 GO TO IS3.
220             CRITICALITY-CALC.
221                 COMPUTE PC11(TALLY) ROUNDED = PFAIL * PERCENT(TALLY) *
222             -       TPC11(TALLY) ON SIZE ERROR MONITOR PFAIL.
223                 ADD PC11(TALLY) TO GRAND-TOTAL-CRIT(TALLY).
224                 PRELIM-TOTAL-CRIT(TALLY).
225             C1.
226                 IF KNW GREATER THAN 1 PERFORM PRELIMINARY-OUTPUT.
227                 PERFORM TOTAL-OUTPUT.
228                 IF WC2 EQUAL SPACE GO TO IS2 ELSE GO TO IS1.
229             IS11.
230                 IF KNW GREATER THAN 1 PERFORM PRELIMINARY-OUTPUT.
231                 PERFORM TOTAL-OUTPUT.
232                 GO TO IS-EXIT.
233             IS-EXIT.
234                 EXIT.
```

```
235
236
237
238
239
240                 OUT-SEC SECTION.
241                 OS1.
242                     RETURN FSORT RECORD INTO WORK-FILE1 AT END GO TO END-RUN.
243                     MOVE WUC1 TO DWUC, PWUC.
244                     MOVE WLALPHA TO DALPHA.
245                     MOVE WLADLR TO DALR.
246                     MOVE TITLE1 TO DTITLE.
247                     PERFORM PHASE-MOVE VARYING TALLY FROM 1 BY 1 UNTIL
248                         TALLY GREATER THAN 9.
249                     ADD 1 TO CRIT-RANK.
250                     MOVE CRIT-RANK TO D-RANK, P-RANK, T-RANK.
251                 OS2.
252                     MOVE TC1 TO TOTAL-CRIT, PL2.
253                     ADD 1 TO LINE-CNT.
254                     IF LINE-CNT GREATER THAN 48 PERFORM HEAD-LINES.
255                     WRITE PRINT-LINE FROM DATA-LINE1.
256                     WRITE PUNCH-LINE FROM WORK-FILE1.
257                     GO TO OS1.
258                 HEAD-LINES.
259                     WRITE PRINT-LINE FROM HEAD1 AFTER ADVANCING 55 LINES.
260                     WRITE PRINT-LINE FROM HEAD2.
261                     MOVE SPACE TO PRINT-LINE.
262                     WRITE PRINT-LINE.
263                     MOVE 0 TO LINE-CNT.
264
265
266
267
268
269                 FIND-ALPHA SECTION.
270                 FF1.
271                     MOVE 0 TO ZZZ, ANF.
272                     PERFORM FF5 VARYING TLY FROM 100 BY 100 UNTIL ZZZ
273                         GREATER THAN 0.
274                     IF TLY EQUAL 200 MOVE 1 TO X ELSE
275                     SUBTRACT 200 FROM TLY GIVING X, MOVE 0 TO Y, ZZZ.
276                     PERFORM FF6 VARYING TLY FROM X  BY 10 UNTIL ZZZ
277                         GREATER THAN 0.
278                     IF TLY LESS THAN 21 MOVE 21 TO TLY.
279                     SUBTRACT 20 FROM TLY GIVING X, MOVE 0 TO Y, ZZZ.
280                     PERFORM FF7 VARYING TLY FROM X BY 1 UNTIL ZZZ EQUAL 999.
281                     SUBTRACT 1 FROM TLY.
282                 FF11.
283                     MOVE TLY TO DA-IND.
284                     GO TO FF-EXIT.
285                 FF5.
286                     IF TLY GREATER THAN 3100 PERFORM ALPHA-NOT-FOUND.
287                     IF ANF GREATER THAN 0 GO TO FF-EXIT.
288                     IF DA-ALPHA(TLY)   EQUAL FA1 AND DA-ADLR(TLY) EQUAL FALR
289                         GO TO FF11.
290                     IF DA-ALPHA(TLY) GREATER THAN FA1 MOVE 999 TO ZZZ.
291                     IF DA-ALPHA(TLY) EQUAL SPACE MOVE 999 TO ZZZ.
292                 FF6.
293                     IF DA-ALPHA(TLY)   EQUAL FA1 AND DA-ADLR(TLY) EQUAL FALR
294                         GO TO FF11.
```

```
295                 IF DA-ALPHA(TLY) GREATER THAN FA1 MOVE 999 TO ZZZ.
296                 IF DA-ALPHA(TLY) EQUAL SPACE MOVE 999 TO ZZZ.
297                 ADD 1 TO Y.
298                 IF Y GREATER THAN 11 PERFORM ALPHA-NOT-FOUND.
299                 IF ANF GREATER THAN 0 GO TO FF-EXIT.
300           FF7.
301                 IF DA-ALPHA(TLY)   EQUAL FA1 AND DA-ADLR(TLY) EQUAL FALR
302                     GO TO FF11.
303                 ADD 1 TO Y.
304                 IF Y GREATER THAN 11 PERFORM ALPHA-NOT-FOUND.
305                 IF ANF GREATER THAN 0 GO TO FF-EXIT.
306           FF-EXIT.
307                 EXIT.
308
309
310
311
312
313           PRELIMINARY-OUTPUT SECTION.
314           PRE1.
315                 PERFORM PRE2 VARYING TALLY FROM 1 BY 1 UNTIL TALLY EQUAL 10.
316                 MOVE CK-ALPHA TO FA1, WLALPHA.
317                 MOVE CK-ALPHA TO DALPHA.
318                 MOVE CK-ADLR TO FALR, WLADLR.
319                 MOVE CK-ADLR TO DALR.
320                 MOVE 0 TO ANF.
321                 PERFORM FIND-ALPHA.
322                 IF ANF EQUAL 0
323                 MOVE DA-TITLE(DA-IND) TO TITLE1 ELSE MOVE SPACE TO TITLE1.
324                 MOVE 0 TO TC1.
325                 PERFORM COMBINE-CRIT.
326                 WRITE PUNCH-LINE FROM WORK-FILE1.
327                 WRITE PRINT-LINE FROM WORK-FILE1.
328                 MOVE WUC-ALPHA TO CK-ALPHA.
329                 MOVE WUC-ADLR TO CK-ADLR.
330                 GO TO PRE-EXIT.
331           PRE2.
332                 MOVE PRELIM-TOTAL-CRIT(TALLY) TO PC11(TALLY).
333                 MOVE 0 TO PRELIM-TOTAL-CRIT(TALLY).
334           PRE-EXIT.
335                 EXIT.
336
337
338
339
340
341           TOTAL-OUTPUT SECTION.
342
343           TO61.
344                 PERFORM TO62 VARYING TALLY FROM 1 BY 1 UNTIL TALLY EQUAL 10.
345                 PERFORM COMBINE-CRIT.
346                 IF KNW NOT GREATER THAN 1
347                 MOVE CK-ALPHA TO WLALPHA  FA1  ELSE MOVE SPACE TO WLALPHA.
348                 IF KNW NOT GREATER THAN 1
349                 MOVE CK-ADLR TO WLADLR, FALR ELSE MOVE SPACE TO WLADLR.
350                 MOVE 0 TO ANF.
351                 IF KNW NOT GREATER THAN 1
352                 PERFORM FIND-ALPHA.
353                 IF KNW NOT GREATER THAN 1
354                 MOVE DA-TITLE(DA-IND) TO TITLE1 ELSE MOVE SPACE TO TITLE1.
                    RELEASE FSORT1 FROM WORK-FILE1.
```

```
355                 GO TO TOS-EXIT.
356             TOS2.
357                 MOVE GRAND-TOTAL-CRIT(TALLY) TO PC11(TALLY).
358                 MOVE 0 TO GRAND-TOTAL-CRIT(TALLY).
359             TOS-EXIT.
360                 EXIT.
361
362
363
364
365
366             SET-PERCENT SECTION.
367             SP1.
368                 MOVE ALL '5' TO PP1.
369                 IF WS1 EQUAL 'B' GO TO SP10.
370                 IF WS1 EQUAL 'C' GO TO SP11.
371                 IF WS1 EQUAL 'A' OR WS1 EQUAL 'D' GO TO SP12.
372                 IF WS1 EQUAL 'E' GO TO SP13.
373                 IF WS1 EQUAL 'F' GO TO SP14.
374                 IF WS1 EQUAL 'G' GO TO SP15.
375                 IF WS1 EQUAL 'H' GO TO SP16.
376                 IF WS1 EQUAL 'J' GO TO SP17.
377                 IF WS1 EQUAL 'K' GO TO SP18.
378                 GO TO SP-EXIT.
379             SP10.
380                 IF WS2 EQUAL 'B' MOVE PP12 TO PP1 ELSE
381                     MOVE PP7 TO PP1.
382                 GO TO SP-EXIT.
383             SP11.
384                 IF WS2 EQUAL 'A' OR WS2 EQUAL 'B' OR WS2 EQUAL 'C' MOVE PP5
385                     TO PP1.
386                 IF WS2 EQUAL 'D' OR WS2 EQUAL 'E' MOVE PP6 TO PP1.
387                 IF WS2 EQUAL 'F' MOVE PP14 TO PP1.
388                 GO TO SP-EXIT.
389             SP12.
390                 MOVE PP4 TO PP1.
391                 GO TO SP-EXIT.
392             SP13.
393                 MOVE PP8 TO PP1.
394                 GO TO SP-EXIT.
395             SP14.
396                 IF WS2 EQUAL 'B' MOVE PP10 TO PP1 ELSE
397                     MOVE PP2 TO PP1.
398                 GO TO SP-EXIT.
399             SP15.
400                 MOVE PP16 TO PP1.
401                 GO TO SP-EXIT.
402             SP16.
403                 MOVE PP13 TO PP1.
404                 GO TO SP-EXIT.
405             SP17.
406                 IF WS2 EQUAL 'A' MOVE PP3 TO PP1 ELSE MOVE PP2 TO PP1.
407                 GO TO SP-EXIT.
408             SP18.
409                 IF WS2 EQUAL 'A' OR WS2 EQUAL 'B' MOVE PP9 TO PP1
410                     ELSE MOVE PP11 TO PP1.
411                 GO TO SP-EXIT.
412             SP-EXIT.
413                 EXIT.
414             MISC SECTION.
```

```
                415                 CLEAR-TOTALS.
                416                     MOVE 0 TO PRELIM-TOTAL-CRIT(TALLY),
                417                         GRAND-TOTAL-CRIT(TALLY),
                418                 ABORT1.
                419                     MOVE 'END OF CARDS ENCOUNTERED IN ERROR-----' TO PRINT-LINE.
                420                     WRITE PRINT-LINE.
                421                     STOP RUN.
                422                 PHASE-MOVE.
                423                     MOVE PC11(TALLY) TO PH-CRIT(TALLY), PL11(TALLY).
                424                 ALPHA-NOT-FOUND.
                425                     MOVE 9 TO ANF, MONITOR FA1.
                426                 CLEAR-ARRAY.
                427                     MOVE SPACE TO TITLE-ENTRY(TALLY).
                428                 TAPE-INPUT.
                429                     READ DICT-TAPE AT END MOVE 3400 TO TALLY.
                430                     IF DT-TITLE NOT EQUAL SPACE ADD 1 TO TI-CNT.
                431                     IF DT-TITLE NOT EQUAL SPACE AND TALLY LESS THAN 3400 MOVE
                432                         DICT-ENTRY TO TITLE-ENTRY(TI-CNT).
                433                 CONVERSION1.
                434                     IF PH-SENS(TALLY) EQUAL '0' MOVE .0 TO TPC11(TALLY).
                435                     IF PH-SENS(TALLY) EQUAL '1' MOVE .1 TO TPC11(TALLY).
                436                     IF PH-SENS(TALLY) EQUAL '2' MOVE .2 TO TPC11(TALLY).
                437                     IF PH-SENS(TALLY) EQUAL '3' MOVE .3 TO TPC11(TALLY).
                438                     IF PH-SENS(TALLY) EQUAL '4' MOVE .4 TO TPC11(TALLY).
                439                     IF PH-SENS(TALLY) EQUAL '5' MOVE .5 TO TPC11(TALLY).
                440                     IF PH-SENS(TALLY) EQUAL '6' MOVE .6 TO TPC11(TALLY).
                441                     IF PH-SENS(TALLY) EQUAL '7' MOVE .7 TO TPC11(TALLY).
                442                     IF PH-SENS(TALLY) EQUAL '8' MOVE .8 TO TPC11(TALLY).
                443                     IF PH-SENS(TALLY) EQUAL '9' MOVE .9 TO TPC11(TALLY).
                444                     IF PH-SENS(TALLY) EQUAL 'A' MOVE 1  TO TPC11(TALLY).
                445                 COMBINE-SENS.
                446                     COMPUTE PC11(TALLY) ROUNDED = PC11(TALLY) + TPC11(TALLY) -
                447                 -       PC11(TALLY) * TPC11(TALLY)
                448                     ON SIZE ERROR MONITOR PC11(TALLY).
                449                 COMBINE-CRIT.
                450                     ADD PC11(1), PC11(2), PC11(3), PC11(4), PC11(6), PC11(5),
                451                         PC11(7), PC11(8),  PC11(9), GIVING TC1.
                452                 END-RUN.
                453                     STOP RUN.
ERROR    0427   AS M OPTION IS OFF THIS IS SUPRESSED HEREAFTER:- CLEAR
ERROR    0427   DUPLICATE INTERPROGRAM (5 CHAR) PARAGRAPH NAME,  CLEAR
ERROR    0450   NO ON SIZE ERROR, OVERFLOW POSSIBLE
ERROR    0448   SIGN PRESENT ON FIELD SHOULD BE POSITIVE
ERROR    0448   SIGN PRESENT ON FIELD SHOULD BE POSITIVE
ERROR    0448   SIGN PRESENT ON FIELD SHOULD BE POSITIVE
ERROR    0448   SIGN PRESENT ON FIELD SHOULD BE POSITIVE
ERROR    0448   SIGN PRESENT ON FIELD SHOULD BE POSITIVE
ERROR    0448   SIGN PRESENT ON FIELD SHOULD BE POSITIVE
ERROR    0444   SIGN PRESENT ON FIELD SHOULD BE POSITIVE
ERROR    0444   SIGN PRESENT ON FIELD SHOULD BE POSITIVE
ERROR    0443   SIGN PRESENT ON FIELD SHOULD BE POSITIVE
ERROR    0443   SIGN PRESENT ON FIELD SHOULD BE POSITIVE
ERROR    0442   SIGN PRESENT ON FIELD SHOULD BE POSITIVE
ERROR    0442   SIGN PRESENT ON FIELD SHOULD BE POSITIVE
ERROR    0441   SIGN PRESENT ON FIELD SHOULD BE POSITIVE
ERROR    0441   SIGN PRESENT ON FIELD SHOULD BE POSITIVE
ERROR    0440   SIGN PRESENT ON FIELD SHOULD BE POSITIVE
ERROR    0440   SIGN PRESENT ON FIELD SHOULD BE POSITIVE
ERROR    0439   SIGN PRESENT ON FIELD SHOULD BE POSITIVE
ERROR    0439   SIGN PRESENT ON FIELD SHOULD BE POSITIVE
```

```
ERROR   0438          SIGN PRESENT ON FIELD SHOULD BE POSITIVE
ERROR   0438          SIGN PRESENT ON FIELD SHOULD BE POSITIVE
ERROR   0437          SIGN PRESENT ON FIELD SHOULD BE POSITIVE
ERROR   0437          SIGN PRESENT ON FIELD SHOULD BE POSITIVE
ERROR   0436          SIGN PRESENT ON FIELD SHOULD BE POSITIVE
ERROR   0436          SIGN PRESENT ON FIELD SHOULD BE POSITIVE
ERROR   0435          SIGN PRESENT ON FIELD SHOULD BE POSITIVE
ERROR   0435          SIGN PRESENT ON FIELD SHOULD BE POSITIVE
ERROR   0434          SIGN PRESENT ON FIELD SHOULD BE POSITIVE
ERROR   0434          SIGN PRESENT ON FIELD SHOULD BE POSITIVE
ERROR   0427          SIGN PRESENT ON FIELD SHOULD BE POSITIVE
ERROR   0423          SIGN PRESENT ON FIELD SHOULD BE POSITIVE
ERROR   0423          SIGN PRESENT ON FIELD SHOULD BE POSITIVE
ERROR   0423          SIGN PRESENT ON FIELD SHOULD BE POSITIVE
ERROR   0416          SIGN PRESENT ON FIELD SHOULD BE POSITIVE
ERROR   0416          SIGN PRESENT ON FIELD SHOULD BE POSITIVE
ERROR   0358          SIGN PRESENT ON FIELD SHOULD BE POSITIVE
ERROR   0357          SIGN PRESENT ON FIELD SHOULD BE POSITIVE
ERROR   0337          SIGN PRESENT ON FIELD SHOULD BE POSITIVE
ERROR   0333          SIGN PRESENT ON FIELD SHOULD BE POSITIVE
ERROR   0332          SIGN PRESENT ON FIELD SHOULD BE POSITIVE
ERROR   0332          SIGN PRESENT ON FIELD SHOULD BE POSITIVE
ERROR   0279          NO ON SIZE ERROR, OVERFLOW POSSIBLE
ERROR   0275          NO ON SIZE ERROR, OVERFLOW POSSIBLE
ERROR   0250          NUMERIC MOVE MAY RESULT IN LEFT TRUNCATION
ERROR   0250                AND/OR OVERFLOW INTO FILLER,
ERROR   0223          SIGN PRESENT ON FIELD SHOULD BE POSITIVE
ERROR   0223          SIGN PRESENT ON FIELD SHOULD BE POSITIVE
ERROR   0223          SIGN PRESENT ON FIELD SHOULD BE POSITIVE
ERROR   0222          SIGN PRESENT ON FIELD SHOULD BE POSITIVE
ERROR   0222          SIGN PRESENT ON FIELD SHOULD BE POSITIVE
ERROR   0222          SIGN PRESENT ON FIELD SHOULD BE POSITIVE
ERROR   0192          NUMERIC MOVE MAY RESULT IN LEFT TRUNCATION
ERROR   0192                AND/OR OVERFLOW INTO FILLER,

ERROR* INDICATES FATAL ERROR,


COBOL COMPILATION TIME       8 SECONDS,
    CARDS   CODE    RELOCATABLE                    (COB)   27 JUN 69  10:46:31   0  00055703    14    4  (DELETED)
                                                                                  1  00055773    22    1
    PRINT   CODE    RELOCATABLE                    (COB)   27 JUN 69  10:46:31   0  00055315    14    4  (DELETED)
                                                                                  1  00055403    22    1
    PUNCH   CODE    RELOCATABLE                    (COB)   27 JUN 69  10:46:31   0  00056142    14    4  (DELETED)
                                                                                  1  00056232    22    1
    DCOMSS  CODE    RELOCATABLE                    (COB)   27 JUN 69  10:46:31   0  00056260    14    2  (DELETED)
                                                                                  1  00056314    14    1
```

```
10:46:55    PABC COB SRTMRG,SRTMRG
COBOL UCC VERSION 2
COMPILED ON -  27 JUN 69 AT 10:46:56
           1                    IDENTIFICATION DIVISION.
           2                    PROGRAM-ID. SORT-AND-MERGE-PATH-AND-FAILURE-DATA.
ERROR* 0002     1       OVER 30 CHARACTERS IN WORD OR NUMERIC LITERAL--TRUNCATED TO 30.
           3                    AUTHOR. ROBT RITTER.
           4                    ENVIRONMENT DIVISION.
           5                    CONFIGURATION SECTION.
           6                    SOURCE-COMPUTER. UNIVAC-1108.
           7                    OBJECT-COMPUTER. UNIVAC-1108.
           8                    INPUT-OUTPUT SECTION.
           9                    FILE-CONTROL.
          10                        SELECT CARDS ASSIGN TO CARD-READER-EIGHTY.
          11                        SELECT PATH-TAPE2 ASSIGN TO UNISERVO H
          12                            RESERVE 2 ALTERNATE AREAS.
          13                        SELECT PRINT ASSIGN TO PRINTER.
          14                        SELECT PATH-TAPE ASSIGN TO UNISERVO F
          15                            RESERVE 2 ALTERNATE AREAS.
          16                        SELECT FSORT ASSIGN TO DRUM 200000 WORDS.
          17                   DATA DIVISION.
          18                   FILE SECTION.
          19                   FD PATH-TAPE2 LABEL RECORD OMITTED DATA RECORD TR2
          20                        BLOCK CONTAINS 40 RECORDS.
          21                   01 TR2.
          22                        02 T1 PICTURE X.
          23     0 1                02 T2 PICTURE X(79).
          24                   FD CARDS LABEL RECORD OMITTED DATA RECORD CARD1, CARD2.
          25                   01 CARD1.
          26                        02 C1 PICTURE X(7).
          27     1 1                02 C2 PICTURE X(7).
          28     2 2                02 C3 PICTURE X(66).
          29                   01 CARD2.
          30                        02 C4 PICTURE X(4).
          31     0 4                02 FILLER PICTURE XXXXX.
          32     1 3                02 C5 PICTURE X(7).
          33     2 4                02 C6 PICTURE XXX.
          34     3 1                02 C7 PICTURE X(15).
          35     5 4                02 C8 PICTURE X(44).
          36    13 0                02 C9 PICTURE XX.
          37                   FD PATH-TAPE LABEL RECORD STANDARD VALUE OF ID IS
          38                            'NAVY PATH DATA' DATA RECORD IS REC1
          39                            BLOCK CONTAINS 40 RECORDS.
          40                   01 REC1 PICTURE X(80).
          41                   FD PRINT LABEL RECORD OMITTED DATA RECORD PRINT-LINE.
          42                   01 PRINT-LINE PICTURE X(132).
          43                   SD FSORT FILE CONTAINS ABOUT 1000 RECORDS DATA RECORD FSORT1.
          44                   01 FSORT1.
          45                        02 FS2.
          46                        03 F1 PICTURE X(7).
          47     1 1                03 F2 PICTURE X(7).
          48     2 2                03 F3 PICTURE X(15).
          49     4 5                03 F4 PICTURE X(49).
          50    13 0                03 F5 PICTURE XX.
          51    13 2                02 F6 PICTURE 99999.
          52                   WORKING-STORAGE SECTION.
          53                   77 REC-CNT PICTURE 99999.
          54                   PROCEDURE DIVISION.
          55                   P0.
          56                        OPEN INPUT CARDS.
```


Preceding Page Blank - Filmed

```
                    OPEN OUTPUT PATH-TAPE.
                    OPEN OUTPUT PRINT.
                    OPEN INPUT PATH-TAPE2.
                    MOVE 0 TO REC-CNT.
                    SORT FSORT ON ASCENDING KEY F1, F2, F6 INPUT PROCEDURE IS
                        IN-SEC OUTPUT PROCEDURE IS OUT-SEC.
                    MONITOR REC1.
                    CLOSE PATH-TAPE2.
                    CLOSE PRINT, CARDS, PATH-TAPE.
                    MONITOR REC-CNT.
                    STOP RUN.
                IN-SEC SECTION.
                IS1.
                    ADD 1 TO REC-CNT.
                    MOVE SPACE TO FSORT1.
                    MOVE REC-CNT TO F6.
                    READ CARDS AT END GO TO READ-TAPE.
                    IF C4 EQUAL 'AFPH' GO TO FAILURE-CARD.
                    MOVE CARD1 TO FS2.
                    RELEASE FSORT1.
                    GO TO IS1.
                FAILURE-CARD.
                    MOVE C5 TO F1.
                    MOVE C7 TO F3.
                    MOVE C9 TO F5.
                    RELEASE FSORT1.
                    GO TO IS1.
                READ-TAPE.
                    READ PATH-TAPE2 AT END GO TO IS-EXIT.
                    IF T1 NOT NUMERIC GO TO READ-TAPE.
                    MOVE TR2 TO FS2.
                    RELEASE FSORT1.
                    GO TO READ-TAPE.
                IS-EXIT.
                    EXIT.
                OUT-SEC SECTION.
                OS1.
                    RETURN FSORT RECORD AT END GO TO OS-EXIT.
                    MOVE FSORT1 TO REC1.
                    WRITE REC1.
                    WRITE PRINT-LINE FROM FSORT1.
                    GO TO OS1.
                OS-EXIT.
                    EXIT.

ERROR= INDICATES FATAL ERROR.

COBOL COMPILATION TIME      2 SECONDS.
    CARDS   CODE    RELOCATABLE                    (COB)   27 JUN 69  10:46:54   0  00142416   14   4  (DELETED)
                                                                                  1  00142506   22   1
    PRINT   CODE    RELOCATABLE                    (COB)   27 JUN 69  10:46:54   0  00142534   14   4  (DELETED)
                                                                                  1  00142624   22   1
    PATH-T  CODE    RELOCATABLE                    (COB)   27 JUN 69  10:46:31   0  00059174   14   4  (DELETED)
                                                                                  1  00059264   25   1
    FSORT   CODE    RELOCATABLE                    (COB)   27 JUN 69  10:46:54   0  00142773   14   4  (DELETED)
                                                                                  1  00143063   28   1
    DCOMSS  CODE    RELOCATABLE                    (COB)   27 JUN 69  10:46:54   0  00143240   14   2  (DELETED)
                                                                                  1  00143274   14   1
```

```
10:46:58    @ABC COB DICSRT,DICSRT
COBOL UCC VERSION 2
COMPILED ON -  27 JUN 69 AT 10:46:58
            1                       IDENTIFICATION DIVISION.
            2                       PROGRAM-ID. TOPDWN-TAPE-SORT.
            3                       AUTHOR. ROBT RITTER
            4                       ENVIRONMENT DIVISION.
            5                       CONFIGURATION SECTION.
            6                       SOURCE-COMPUTER. UNIVAC-1108.
            7                       OBJECT-COMPUTER. UNIVAC-1108.
            8                       INPUT-OUTPUT SECTION.
            9                       FILE-CONTROL.
           10                           SELECT DICT-TAPE ASSIGN TO  UNISERVO H.
           11                           SELECT PRINT ASSIGN TO PRINTER.
           12                           SELECT FSORT ASSIGN TO DRUM 100000 WORDS.
           13                       DATA DIVISION.
           14                       FILE SECTION.
           15                       FD DICT-TAPE LABEL RECORD OMITTED DATA RECORD DICT-ENTRY.
           16                       01 DICT-ENTRY.
           17                           02 DT-ALPHA PICTURE XXXXXX.
           18      1 0                  02 DT-ADLR PICTURE X.
           19      1 1                  02 DT-WUC PICTURE XXXXXXX.
           20      2 2                  02 DT-TITLE PICTURE X(27).
           21                       FD PRINT LABEL RECORD OMITTED DATA RECORD PRINT-LINE.
           22                       01 PRINT-LINE PICTURE X(132).
           23                       SD FSORT FILE CONTAINS ABOUT 4000 RECORDS DATA RECORD IS FSORT1.
           24                       01 FSORT1.
           25                           02 FSKEY PICTURE XXXXXX.
           26      1 1                  02 FSREST PICTURE X(34).
           27                       WORKING-STORAGE SECTION.
           28                       01 PL1 PICTURE X(41).
           29                       PROCEDURE DIVISION.
           30                       P0.
           31                           OPEN OUTPUT PRINT.
           32                           SORT FSORT ON ASCENDING KEY FSKEY INPUT PROCEDURE IS F-IN
           33                               OUTPUT PROCEDURE IS F-OUT.
           34                           CLOSE DICT-TAPE WITH LOCK.
           35                           STOP RUN.
           36                       F-IN SECTION.
           37                       F1.
           38                           OPEN INPUT DICT-TAPE.
           39                       F2.
           40                           READ DICT-TAPE AT END GO TO F1-EXIT.
           41                           RELEASE FSORT1 FROM DICT-ENTRY.
           42                           GO TO F2.
           43                       F1-EXIT.
           44                           EXIT.
           45                       F-OUT SECTION.
           46                       F3.
           47                           CLOSE DICT-TAPE. OPEN OUTPUT DICT-TAPE.
           48                       F4.
           49                           RETURN FSORT RECORD INTO DICT-ENTRY AT END GO TO F3-EXIT.
           50                           MOVE DICT-ENTRY TO PL1.
           51                           WRITE DICT-ENTRY.
           52                           WRITE PRINT-LINE FROM PL1.
           53                           GO TO F4.
           54                       F3-EXIT.
           55                           EXIT.
```

```
COBOL COMPILATION TIME       2 SECONDS,
    DICT+T   CODE    RELOCATABLE                    (COB)   27 JUN 69   10:46:54   0  00142452    14    4  (DELETED)
                                                                                    1  00142742    25    1
    PRINT    CODE    RELOCATABLE                    (COB)   27 JUN 69   10:46:57   0  00151556    14    4  (DELETED)
                                                                                    1  00151646    22    1
    FSORT    CODE    RELOCATABLE                    (COB)   27 JUN 69   10:46:57   0  00152015    14    4  (DELETED)
                                                                                    1  00152105    28    1
    DCOMSS   CODE    RELOCATABLE                    (COB)   27 JUN 69   10:46:57   0  00152141    14    2  (DELETED)
                                                                                    1  00152175    14    1
```

TOP-DOWN TAPE SORT (PAGE 2 OF 2)

```
10:46:51    @ABC COB TOPDWN,TOPDWN
COBOL UCC VERSION 2
COMPILED ON =  27 JUN 69 AT 10:46:51
           1                    IDENTIFICATION DIVISION.
           2                    PROGRAM-ID. REVISED TOPDWN TAPE GEN.
           3                    AUTHOR. ROBT RITTER
           4                    ENVIRONMENT DIVISION.
           5                    CONFIGURATION SECTION.
           6                    SOURCE-COMPUTER. UNIVAC-1108.
           7                    OBJECT-COMPUTER. UNIVAC-1108.
           8                    INPUT-OUTPUT SECTION.
           9                    FILE-CONTROL.
          10                        SELECT CARDS ASSIGN TO CARD-READER-EIGHTY.
          11                        SELECT PRINT ASSIGN TO PRINTER.
          12                        SELECT DICT-TAPE ASSIGN TO  UNISERVO H.
          13                        SELECT FSORT ASSIGN TO DRUM 100000 WORDS.
          14                        SELECT DATA-TAPE ASSIGN TO UNISERVO F.
          15                   DATA DIVISION.
          16                   FILE SECTION.
          17                   FD DICT-TAPE LABEL RECORD OMITTED DATA RECORD DICT-ENTRY.
          18                   01 DICT-ENTRY.
          19                        02 DT-ALPHA PICTURE XXXXXX.
          20     1 0                02 DT-ADLR PICTURE X.
          21     1 1                02 DT-WUC PICTURE XXXXXXX.
          22     2 2                02 DT-TITLE PICTURE X(27).
          23                   FD PRINT LABEL RECORD OMITTED DATA RECORD PRINT-LINE.
          24                   01 PRINT-LINE PICTURE X(132).
          25                   FD CARDS LABEL RECORD OMITTED DATA RECORDS ARE CARD1, CARD2.
          26                   01 CARD1.
          27                        02 FILLER PICTURE X(2).
          28     0 2                02 FLAG PICTURE X.
          29     0 3                02 TITLE PICTURE X(27).
          30     5 0                02 C31 PICTURE X.
          31     5 1                02 WUC PICTURE X(7).
          32     6 2                02 ADLR PICTURE X.
          33     6 3                02 ALPHA PICTURE X(6).
          34     7 3                02 C46 PICTURE X.
          35     7 4                02 CONFIG PICTURE XX.
          36     8 0                02 IFLR PICTURE X.
          37     8 1                02 INPUTS PICTURE X(6).
          38     9 1                02 OFLR PICTURE X.
          39     9 2                02 DEP-FUNCS PICTURE X(6).
          40    10 2                02 C63 PICTURE X.
          41    10 3                02 CON-FAC PICTURE XX.
          42    10 5                02 ALT-FUNC PICTURE XXXX.
          43    11 3                02 WUC-SENS PICTURE X.
          44    11 4                02 C71 PICTURE X.
          45    11 5                02 FLIGHT-PHASE-SENSITIVITY.
          46    11 5                     03 SENS-PHN OCCURS 9 TIMES PICTURE X.
          47                   SD FSORT FILE CONTAINS ABOUT 4000 RECORDS DATA RECORD FSORT1.
          48                   01 FSORT1.
          49                        02 FS1 PICTURE X(14).
          50     2 2                02 FS-KEY PICTURE X(7).
          51     3 3                02 FS2 PICTURE X(16).
          52                   FD DATA-TAPE LABEL RECORD OMITTED DATA RECORD TAPE-REC.
          53                   01 TAPE-REC PICTURE X(2000).
          54                   WORKING-STORAGE SECTION.
          55                   77 DENTRY PICTURE 99999.
          56     1 0           77 DA-IND PICTURE 9(5).
          57     2 0           77 SAVE-ALPHA PICTURE X(6).
```

```
 58     3 0          77 SAVE-ADLR PICTURE X(6).
 59     4 0          01 DATA-ARRAY1.
 60     4 0                   02 DA1 OCCURS 4000 TIMES.
 61     4 0                   03 DALPHA.
 62     4 0                   04 DALPHA1 PICTURE X(6).
 63     5 0                   04 DALPHA2 PICTURE X.
 64     5 1                   03 DWUC PICTURE XXXXXXX.
 65     6 2                   03 DDEP-FUNC.
 66     6 2                   04 DDEP-FUNC1 PICTURE X(6).
 67     7 2                   04 DDEP-FUNC2 PICTURE X.
 68     7 3                   03 DWUC-SENS PICTURE X.
 69     7 4                   03 DPH-SENS PICTURE X(9).
 70     9 1                   03 DK-FAC.
 71     9 1                   04 DK-FAC1 PICTURE X.
 72     9 2                   04 DK-FAC2 PICTURE X.
 73     9 3                   03 DALT-FUNC PICTURE XXXX.
 74     4 0          01 DATA-ARRAY2 REDEFINES DATA-ARRAY1.
 75     4 0              02 DA2 OCCURS 74 TIMES PICTURE X(2000).
 76                  PROCEDURE DIVISION.
 77                  PO.
 78                      OPEN INPUT CARDS. OPEN OUTPUT PRINT.
 79                      OPEN OUTPUT DICT-TAPE.
 80                      MOVE 0 TO DENTRY.
 81                      MOVE 1 TO DA-IND.
 82                      PERFORM ARRAY-CLEAR VARYING TALLY FROM 1 BY 1 UNTIL TALLY
 83                          GREATER THAN 4000.
 84                      GO TO READ-DATA-CARDS.
 85                  READ-DATA-CARDS SECTION.
 86                  RDC1.
 87                      READ CARDS AT END GO TO END-RUN.
 88                      IF ALPHA EQUAL SPACE GO TO RDC1.
 89                      IF WUC EQUAL SPACE AND DEP-FUNCS EQUAL SPACE GO TO RDC1.
 90                      IF TITLE NOT EQUAL SPACE
 91                      PERFORM DICTIONARY-TAPE.
 92                      IF WUC EQUAL SPACE AND DEP-FUNCS NOT EQUAL SPACE
 93                          PERFORM SAVE-ALPHA1.
 94                      IF DEP-FUNCS NOT EQUAL SPACE AND FLIGHT-PHASE-SENSITIVITY
 95                          NOT EQUAL SPACE PERFORM PICK-UP-DEP-FUNC.
 96                      IF WUC NOT EQUAL SPACE PERFORM PICK-UP-WUCS.
 97                      GO TO RDC1.
 98                  SAVE-ALPHA1.
 99                      MOVE ALPHA TO SAVE-ALPHA.
100                      MOVE ADLR TO SAVE-ADLR.
101                  PICK-UP-DEP-FUNC SECTION.
102                  PU1.
103                      MOVE ALPHA TO SAVE-ALPHA.
104                      MOVE ADLR TO SAVE-ADLR.
105                      MOVE ALPHA TO DALPHA1(DA-IND).
106                      MOVE ADLR TO DALPHA2(DA-IND).
107                      MOVE DEP-FUNCS TO DDEP-FUNC1(DA-IND).
108                      MOVE DFLR TO DDEP-FUNC2(DA-IND).
109                      MOVE CON-FAC TO DK-FAC(DA-IND).
110                      MOVE ALT-FUNC TO DALT-FUNC(DA-IND).
111                      MOVE FLIGHT-PHASE-SENSITIVITY TO DPH-SENS(DA-IND).
112                      ADD 1 TO DA-IND.
113                  PICK-UP-WUCS SECTION.
114                  PW1.
115                      MOVE ALPHA TO DALPHA1(DA-IND).
116                      MOVE ADLR TO DALPHA2(DA-IND).
117                      MOVE SAVE-ALPHA TO  DDEP-FUNC1(DA-IND).
```

```
118                 MOVE SAVE-ADLR TO DDEP-FUNC2(DA-IND).
119                 MOVE WUC TO DWUC(DA-IND).
120                 MOVE WUC-SENS TO DWUC-SENS(DA-IND).
121                 IF WUC-SENS EQUAL ' ' MOVE 'A' TO DWUC-SENS(DA-IND).
122                 MOVE CON-FAC TO DK-FAC(DA-IND).
123                 ADD 1 TO DA-IND.
124             PW-EXIT.
125                 EXIT.
126             END-RUN SECTION.
127             ER1.
128                 PERFORM ARRAY-PRINT.
129                 SORT FSORT ON ASCENDING KEY FS-KEY INPUT PROCEDURE IS
130                     FS-IN OUTPUT PROCEDURE IS FS-OUT.
131                 PERFORM TAPE-OUTPUT.
132                 PERFORM ARRAY-PRINT.
133                 CLOSE DICT-TAPE.
134                 MONITOR DENTRY.
135                 MONITOR DA-IND.
136                 STOP RUN.
137             DICTIONARY-TAPE SECTION.
138             DS1.
139                 MOVE ALPHA TO DT-ALPHA.
140                 MOVE ADLR TO DT-ADLR.
141                 MOVE WUC TO DT-WUC.
142                 MOVE TITLE TO DT-TITLE.
143                 WRITE DICT-ENTRY.
144                 ADD 1 TO DENTRY.
145             DS-EXIT.
146                 EXIT.
147             FS-IN SECTION.
148             FS1.
149                 PERFORM FS2 VARYING TALLY FROM 1 BY 1 UNTIL TALLY
150                     GREATER THAN 4000.
151                 GO TO FS1-EXIT.
152             FS2.
153                 IF DALPHA(TALLY) NOT EQUAL SPACE RELEASE FSORT1
154                     FROM DA1(TALLY).
155             FS1-EXIT.
156                 EXIT.
157             FS-OUT SECTION.
158             FS3.
159                 PERFORM FS4 VARYING TALLY FROM 1 BY 1 UNTIL TALLY
160                     GREATER THAN 4000.
161             FS4.
162                 RETURN FSORT RECORD INTO DA1(TALLY) AT END GO TO FS3-EXIT.
163             FS3-EXIT.
164                 EXIT.
165             TAPE-OUTPUT SECTION.
166             TO1.
167                 OPEN OUTPUT DATA-TAPE.
168                 PERFORM TO2 VARYING TALLY FROM 1 BY 1 UNTIL TALLY
169                     GREATER THAN 74.
170                 CLOSE DATA-TAPE.
171                 GO TO TO-EXIT.
172             TO2.
173                 WRITE TAPE-REC FROM DA2(TALLY).
174             TO-EXIT.
175                 EXIT.
176             ARRAY-PRINT SECTION.
177             AR1.
```

```
          178                     MONITOR DA-IND,
          179                     PERFORM AR2 VARYING TALLY FROM 1 BY 1 UNTIL TALLY
          180                        GREATER THAN 4000,
          181                     GO TO AR-EXIT,
          182                 AR2,
          183                     IF DALPHA(TALLY) EQUAL SPACE GO TO AR-EXIT,
          184                     WRITE PRINT-LINE FROM DA1(TALLY),
          185                 AR-EXIT,
          186                     EXIT,
          187                 MISC SECTION,
          188                 ARRAY-CLEAR,
          189                     MOVE SPACE TO DA1(TALLY),
ERROR     0189          AS M OPTION IS OFF THIS IS SUPRESSED HEREAFTER:- ARRAY
ERROR     0189          DUPLICATE INTERPROGRAM (5 CHAR) PARAGRAPH NAME,  ARRAY
ERROR     0189          SIGN PRESENT ON FIELD SHOULD BE POSITIVE
ERROR     0184          SIGN PRESENT ON FIELD SHOULD BE POSITIVE
ERROR     0183          SIGN PRESENT ON FIELD SHOULD BE POSITIVE
ERROR     0173          SIGN PRESENT ON FIELD SHOULD BE POSITIVE
ERROR     0162          SIGN PRESENT ON FIELD SHOULD BE POSITIVE
ERROR     0154          SIGN PRESENT ON FIELD SHOULD BE POSITIVE
ERROR     0153          SIGN PRESENT ON FIELD SHOULD BE POSITIVE

COBOL COMPILATION TIME      4 SECONDS.
    TOPDWN          SYMBOLIC                    (COB)   27 JUN 69  10:46:35  0  00036670  14  926  (DELETED)
    CARDS   CODE    RELOCATABLE                 (COB)   27 JUN 69  10:46:49  0  00127147  14    4  (DELETED)
                                                                              1  00127237  25    1
    PRINT   CODE    RELOCATABLE                 (COB)   27 JUN 69  10:46:49  0  00127031  14    4  (DELETED)
                                                                              1  00127121  22    1
    DICT4T  CODE    RELOCATABLE                 (COB)   27 JUN 69  10:46:49  0  00126710  14    4  (DELETED)
                                                                              1  00127000  25    1
    FSORT   CODE    RELOCATABLE                 (COB)   27 JUN 69  10:46:41  0  00106316  14    4  (DELETED)
                                                                              1  00106606  26    1
    DATA4T  CODE    RELOCATABLE                 (COB)   27 JUN 69  10:46:31  0  00056021  14    4  (DELETED)
                                                                              1  00056111  25    1
    DCOMSS  CODE    RELOCATABLE                 (COB)   27 JUN 69  10:46:49  0  00127270  14    2  (DELETED)
                                                                              1  00127324  14    1
    TOPDWN  CODE    RELOCATABLE                 (COB)   27 JUN 69  10:46:35  0  00071676  14    2  (DELETED)
                                                                              1  00071732  15    1
```

```
10:46:45    @ABC COB TPPRT,TPPR1
COBOL UCC VERSION 2
COMPILED ON -  27 JUN 69 AT 10:46:45
                1                       IDENTIFICATION DIVISION.
                2                       PROGRAM-ID. TOP-DOWN-PRINT-ROUTINE.
                3                       AUTHOR. ROBT RITTER
                4                       ENVIRONMENT DIVISION.
                5                       CONFIGURATION SECTION.
                6                       SOURCE-COMPUTER. UNIVAC-1108.
                7                       OBJECT-COMPUTER. UNIVAC-1108.
                8                       INPUT-OUTPUT SECTION.
                9                       FILE-CONTROL.
               10                           SELECT DICT-TAPE ASSIGN TO  UNISERVO H.
               11                           SELECT PRINT ASSIGN TO PRINTER.
               12                           SELECT CARDS ASSIGN TO UNISERVO F
               13                                RESERVE 2 ALTERNATE AREAS.
               14                       DATA DIVISION.
               15                       FILE SECTION.
               16                       FD DICT-TAPE LABEL RECORD OMITTED DATA RECORD DICT-ENTRY.
               17                       01 DICT-ENTRY.
               18                           02 DT-ALPHA PICTURE XXXXXX.
               19     1 0                   02 DT-ADLR PICTURE X.
               20     1 1                   02 DT-WUC PICTURE XXXXXX.
               21     2 2                   02 DT-TITLE PICTURE X(27).
               22                       FD PRINT LABEL RECORD OMITTED DATA RECORD PRINT-LINE.
               23                       01 PRINT-LINE PICTURE X(132).
               24                       FD CARDS LABEL RECORD STANDARD VALUE OF ID IS
               25                           'NAVY PATH DATA' DATA RECORD IS WORK-CARD BLOCK CONTAINS
               26                                40 RECORDS.
               27                       01 WORK-CARD.
               28                           02 WC1 PICTURE X(7).
               29     1 1                   02 WC2 PICTURE X(7).
               30     2 2                   02 FILLER PICTURE X(64).
               31    13 0                   02 TESTER PICTURE 99.
               32                       WORKING-STORAGE SECTION.
               33                       77 TI-CNT PICTURE 99999.
               34     1 0               77 END-FLAG PICTURE 999 VALUE 0.
               35     2 0               77 TALLY1 PICTURE 99999.
               36     3 0               77 ANF PICTURE 9.
               37     4 0               77 TALLY2 PICTURE 99999.
               38     5 0               77 FA1 PICTURE XXXXXX.
               39     6 0               77 FALR PICTURE 99999.
               40     7 0               77 LINE-CNT PICTURE 99999.
               41     8 0               77 XX PICTURE 99999.
               42     9 0               77 CONV1 PICTURE X.
               43    10 0               77 CONV2 PICTURE 9V99.
               44    11 0               77 TLY PICTURE 99999.
               45    12 0               77 ZZZ PICTURE 99999.
               46    13 0               77 X PICTURE 99999.
               47    14 0               77 Y PICTURE 99999.
               48    15 0               77 DA-IND PICTURE 99999.
               49    16 0               01 WORK-CARD1.
               50    16 0                   02 WFUNC1 OCCURS 8 TIMES.
               51    16 0                       03 WF1.
               52    16 0                       04 WF-CK1 PICTURE X.
               53    16 1                       04 WF11 PICTURE XXXXX.
               54    17 0                       03 WFLR PICTURE X.
               55    25 2                   02 EXTRA-SPACE PICTURE X.
               56    25 3                   02 CALT-FUNC PICTURE XXXXXX.
               57    26 3                   02 CALT-LR PICTURE X.
```

```
 58    26 4            02 CCON-FAC PICTURE XXXX,
 59    27 2            02 CSENS PICTURE X OCCURS 9 TIMES,
 60    28 5            02 PATH-COMP PICTURE X,
 61    29 0            02 CARD-NO1 PICTURE 99,
 62    30 0        01 WORK-CARD2,
 63    30 0            02 WFUNC2 OCCURS 11 TIMES,
 64    30 0                03 WF2 PICTURE XXXXXX,
 65    31 0                03 WF2LR PICTURE X,
 66    42 5            02 FILLER PICTURE X,
 67    43 0            02 CARD-NO2 PICTURE 99,
 68    44 0        01 DATA-LINE1,
 69    44 0            02 DWUC PICTURE X(7)BB,
 70    49 3            02 DWUC-ALPHA PICTURE XXXXXX,
 71    46 3            02 DWUC-ADLR PICTURE XBB,
 72    47 0            02 DWUC-TITLE PICTURE X(27),
 73    52 0        01 DATA-LINE2,
 74    52 0            02 FILLER PICTURE X(9),
 75    53 3            02 DALPHA PICTURE X(7)BB,
 76    59 0            02 DALPHA-TITLE PICTURE X(27)BB,
 77    59 5            02 DK-FAC PICTURE XXXXBB,
 78    60 5            02 DALT-SYSTEM PICTURE XXXXXXXBB,
 79    62 2            02 DSENS OCCURS 9 TIMES PICTURE ZV99BB,
 80    70 0        01 TITLE-ARRAY,
 81    70 0            02 TITLE-ENTRY OCCURS 4000 TIMES,
 82    70 0            03 DA-ALPHA PICTURE XXXXXX,
 83    71 0            03 DA-ADLR PICTURE X,
 84    71 1            03 DA-WUC PICTURE XXXXXXX,
 85    72 2            03 DA-TITLE PICTURE X(27),
 86  7404 0        01 HEAD2,
 87  7404 0            02 H1 PICTURE X(58) VALUE
 88  7404 0            ' WUC       ALPHA          ALPHA TITLE              FACT   SYST',
 89  7413 4            02 H2 PICTURE X(59) VALUE
 90  7413 4            'EM  PH1  PH2  PH3  PH4  PH5  PH6  PH7  PH8  PH9             ',
 91  7424 0        01 HEAD1,
 92  7424 0            02 H3 PICTURE X(47) VALUE SPACE,
 93  7431 5            02 H4 PICTURE X(59) VALUE
 94  7431 5            'COND   ALT       SENSITIVITY BY FLIGHT PHASE IN PERCENT    ',
 95                    PROCEDURE DIVISION,
 96                    P0.
 97                        OPEN OUTPUT PRINT,
 98                        PERFORM CLEAR-ARRAY VARYING TALLY FROM 1 BY 1 UNTIL TALLY
 99                            GREATER THAN 4000,
100                        OPEN INPUT DICT-TAPE,
101                        MOVE 0 TO TI-CNT,
102                        PERFORM TAPE-INPUT VARYING TALLY FROM 1 BY 1 UNTIL TALLY
103                            GREATER THAN 4000,
104                        CLOSE DICT-TAPE,
105                        MOVE 99 TO LINE-CNT,
106                        MOVE SPACE TO DATA-LINE1, DATA-LINE2,
107                        OPEN INPUT CARDS,
108                    READ-DATA-CARDS SECTION,
109                    RDC1.
110                        READ CARDS AT END GO TO END-RUN,
111                    RDC1-1.
112                        IF TESTER EQUAL 99 READ CARDS AT END GO TO END-RUN,
113                        IF END-FLAG EQUAL 999 GO TO END-RUN,
114                        MOVE WORK-CARD TO WORK-CARD1,
115                        PERFORM WUC-LINE,
116                        PERFORM PATH-LINE VARYING TALLY FROM 3 BY 1 UNTIL TALLY
117                            GREATER THAN 8,
```

```
118                 GO TO RDC1-1.
119             WUC-LINE SECTION.
120             WL1.
121                 MOVE WF1(2) TO FA1, DWUC-ALPHA.
122                 MOVE WFLR(2) TO FALR, DWUC-ADLR.
123                 MOVE 0 TO ANF.
124                 PERFORM FIND-ALPHA.
125                 IF ANF NOT EQUAL 0 MOVE SPACE TO DWUC-TITLE ELSE
126                 MOVE DA-TITLE(DA-IND) TO DWUC-TITLE.
127                 MOVE WF1(1) TO DWUC.
128                 IF LINE-CNT GREATER THAN 40 PERFORM HEAD-LINES.
129                 WRITE PRINT-LINE FROM DATA-LINE1 AFTER ADVANCING 3 LINES.
130                 MOVE SPACE TO PRINT-LINE. ADD 3 TO LINE-CNT.
131             WL-EXIT.
132                 EXIT.
133             PATH-LINE SECTION.
134             PL1.
135                 IF WF1(TALLY) EQUAL SPACE GO TO PL-EXIT.
136                 MOVE WF1(TALLY) TO FA1.
137                 MOVE WFLR(TALLY) TO FALR.
138                 MOVE WFUNC1(TALLY) TO DALPHA.
139                 MOVE 0 TO ANF.
140                 PERFORM FIND-ALPHA.
141                 IF ANF NOT EQUAL 0 MOVE SPACE TO DALPHA-TITLE ELSE
142                 MOVE DA-TITLE(DA-IND) TO DALPHA-TITLE.
143                 ADD 1, TALLY GIVING TALLY1.
144                 IF WF1(TALLY1) NOT EQUAL SPACE AND TALLY1 LESS THAN 10 GO TO PL2.
145                 READ CARDS AT END MOVE 999 TO END-FLAG.
146                 IF WC2 EQUAL SPACE MOVE 99 TO TESTER.
147                 MOVE WORK-CARD TO WORK-CARD2.
148                 IF TESTER EQUAL 2
149                 WRITE PRINT-LINE FROM DATA-LINE2.
150                 IF TESTER EQUAL 2
151                 MOVE SPACE TO DATA-LINE2.
152                 IF TESTER EQUAL 2
153                 ADD 1 TO LINE-CNT.
154                 IF TESTER EQUAL 2 PERFORM PICK-UP-REST-OF-PATH
155                     VARYING TALLY2 FROM 3 BY 1 UNTIL TALLY2 GREATER THAN 11.
156                 MOVE CALT-FUNC TO DALT-SYSTEM.
157                 MOVE CCON-FAC TO DK-FAC.
158                 PERFORM SENS-MOVE VARYING XX FROM 1 BY 1 UNTIL XX EQUAL 10.
159             PL2.
160                 WRITE PRINT-LINE FROM DATA-LINE2.
161                 MOVE SPACE TO DATA-LINE2.
162                 ADD 1 TO LINE-CNT.
163                 IF TESTER EQUAL 2 READ CARDS AT END GO TO END-RUN.
164                 IF WC2 EQUAL SPACE MOVE 99 TO TESTER.
165                 GO TO PL-EXIT.
166             SENS-MOVE.
167                 MOVE CSENS(XX) TO CONV1.
168                 PERFORM CONVERSION1.
169                 MOVE CONV2 TO DSENS(XX).
170             PL-EXIT.
171                 EXIT.
172             FIND-ALPHA SECTION.
173             FF1.
174                 MOVE 0 TO ZZZ, ANF.
175                 PERFORM FF5 VARYING TLY FROM 100 BY 100 UNTIL ZZZ
176                     GREATER THAN 0.
177                 IF TLY EQUAL 200 MOVE 1 TO X ELSE
```

TOP-DOWN PRINTOUT ROUTINE (PAGE 3 OF 5)

```
178                 SUBTRACT 200 FROM TLY GIVING X, MOVE 0 TO Y, ZZZ.
179                 PERFORM FF6 VARYING TLY FROM X  BY 10 UNTIL ZZZ
180                     GREATER THAN 0,
181                 SUBTRACT 20 FROM TLY GIVING X, MOVE 0 TO Y, ZZZ.
182                 PERFORM FF7 VARYING TLY FROM X BY 1 UNTIL ZZZ EQUAL 999.
183                 SUBTRACT 1 FROM TLY.
184             FF11.
185                 MOVE TLY TO DA-IND.
186                 GO TO FF-EXIT.
187             FF5.
188                 IF TLY GREATER THAN 4000 PERFORM ALPHA-NOT-FOUND.
189                 IF ANF GREATER THAN 0 GO TO FF-EXIT.
190                 IF DA-ALPHA(TLY)   EQUAL FA1 AND DA-ADLR(TLY) EQUAL FALR
191                     GO TO FF11.
192                 IF DA-ALPHA(TLY) GREATER THAN FA1 MOVE 999 TO ZZZ.
193                 IF DA-ALPHA(TLY) EQUAL SPACE MOVE 999 TO ZZZ.
194             FF6.
195                 IF DA-ALPHA(TLY)   EQUAL FA1 AND DA-ADLR(TLY) EQUAL FALR
196                     GO TO FF11.
197                 IF DA-ALPHA(TLY) GREATER THAN FA1 MOVE 999 TO ZZZ.
198                 IF DA-ALPHA(TLY) EQUAL SPACE MOVE 999 TO ZZZ.
199                 ADD 1 TO Y.
200                 IF Y GREATER THAN 11 PERFORM ALPHA-NOT-FOUND.
201                 IF ANF GREATER THAN 0 GO TO FF-EXIT.
202             FF7.
203                 IF DA-ALPHA(TLY)   EQUAL FA1 AND DA-ADLR(TLY) EQUAL FALR
204                     GO TO FF11.
205                 ADD 1 TO Y.
206                 IF Y GREATER THAN 11 PERFORM ALPHA-NOT-FOUND.
207                 IF ANF GREATER THAN 0 GO TO FF-EXIT.
208             FF-EXIT.
209                 EXIT.
210             PICK-UP-REST-OF-PATH SECTION.
211             PRP1.
212                 IF WF2(TALLY2) EQUAL SPACE GO TO PRP-EXIT.
213                 MOVE WF2(TALLY2) TO FA1.
214                 MOVE WF2LR(TALLY2) TO FALR.
215                 MOVE WFUNC2(TALLY2) TO DALPHA.
216                 MOVE 0 TO ANF.
217                 PERFORM FIND-ALPHA.
218                 MOVE SPACE TO DALPHA-TITLE.
219                 IF ANF EQUAL 0 MOVE DA-TITLE(DA-IND) TO DALPHA-TITLE.
220                 ADD 1, TALLY2 GIVING TALLY2.
221                 IF WF2(TALLY2) EQUAL SPACE GO TO PRP-EXIT.
222                 SUBTRACT 1 FROM TALLY2.
223                 WRITE PRINT-LINE FROM DATA-LINE2.
224                 MOVE SPACE TO DATA-LINE2.
225                 ADD 1 TO LINE-CNT.
226                 GO TO PRP-EXIT.
227             PRP-EXIT.
228                 EXIT.
229             MISC SECTION.
230             ALPHA-NOT-FOUND.
231                 MOVE 9 TO ANF.
232             CLEAR-ARRAY.
233                 MOVE SPACE TO TITLE-ENTRY(TALLY).
234             HEAD-LINES.
235                 WRITE PRINT-LINE FROM HEAD1 AFTER ADVANCING 55 LINES.
236                 WRITE PRINT-LINE FROM HEAD2.
237                 MOVE SPACE TO PRINT-LINE.
```

```
           238                     MOVE 0 TO LINE-CNT.
           239                 TAPE-INPUT.
           240                     READ DICT-TAPE AT END  MOVE 4000 TO TALLY.
           241                     IF DT-TITLE NOT EQUAL SPACE ADD 1 TO TI-CNT.
           242                     IF DT-TITLE NOT EQUAL SPACE AND TALLY LESS THAN 4000 MOVE
           243                         DICT-ENTRY TO TITLE-ENTRY(TI-CNT).
           244                 CONVERSION1.
           245                     IF CONV1 EQUAL 'A' MOVE 1 TO CONV2.
           246                     IF CONV1 EQUAL '0' MOVE 0 TO CONV2.
           247                     IF CONV1 EQUAL '1' MOVE .1 TO CONV2.
           248                     IF CONV1 EQUAL '2' MOVE .2 TO CONV2.
           249                     IF CONV1 EQUAL '3' MOVE .3 TO CONV2.
           250                     IF CONV1 EQUAL '4' MOVE .4 TO CONV2.
           251                     IF CONV1 EQUAL '5' MOVE .5 TO CONV2.
           252                     IF CONV1 EQUAL '6' MOVE .6 TO CONV2.
           253                     IF CONV1 EQUAL '7' MOVE .7 TO CONV2.
           254                     IF CONV1 EQUAL '8' MOVE .8 TO CONV2.
           255                     IF CONV1 EQUAL '9' MOVE .9 TO CONV2.
           256                 END-RUN.
           257                     CLOSE CARDS, PRINT.
           258                     STOP RUN.
ERROR      0233          SIGN PRESENT ON FIELD SHOULD BE POSITIVE
ERROR      0220          NO ON SIZE ERROR, OVERFLOW POSSIBLE
ERROR      0181          NO ON SIZE ERROR, OVERFLOW POSSIBLE
ERROR      0178          NO ON SIZE ERROR, OVERFLOW POSSIBLE
ERROR      0143          NO ON SIZE ERROR, OVERFLOW POSSIBLE
ERROR      0138          SIGN PRESENT ON FIELD SHOULD BE POSITIVE
ERROR      0137          SIGN PRESENT ON FIELD SHOULD BE POSITIVE
ERROR      0136          SIGN PRESENT ON FIELD SHOULD BE POSITIVE
ERROR      0135          SIGN PRESENT ON FIELD SHOULD BE POSITIVE

COBOL COMPILATION TIME      6 SECONDS.
    DICT+T  CODE    RELOCATABLE                          (COB)   27 JUN 69  10:46:41   0  00106642    14    4  (DELETED)
                                                                                       1  00106732    25    1
    PRINT   CODE    RELOCATABLE                          (COB)   27 JUN 69  10:46:41   0  00106400    14    4  (DELETED)
                                                                                       1  00106470    22    1
    CARDS   CODE    RELOCATABLE                          (COB)   27 JUN 69  10:46:41   0  00106257    14    4  (DELETED)
                                                                                       1  00106347    25    1
    DCOMSS  CODE    RELOCATABLE                          (COB)   27 JUN 69  10:46:42   0  00107101    14    2  (DELETED)
                                                                                       1  00107135    14    1
```